Rapiscan Secure 1000®

Rapiscan® systems

An OSI Systems Company

PEOPLE SCREENING

Hands-Off Screening

Quick and Effective

Privacy Protection

High Resolution Imaging

The **Rapiscan Secure 1000®** is the most effective people screening solution available. The system produces high resolution images that enable the operator to easily identify concealed threat and contraband items. The **Rapiscan Secure 1000** is ideal for high security environments because both organic (e.g. explosives, narcotics, ceramic weapons) and inorganic (e.g. metal) materials are apparent in the image.

Rapiscan Systems has developed advanced techniques to protect the privacy of the person being screened while enabling effective detection of threat items. In a recent study, 19 out of 20 persons preferred a Secure 1000 scan to an invasive pat-down physical search. The system is completely safe for all persons and exceeds the requirements of health authorities worldwide.

The dependable **Rapiscan Secure 1000** is easy to use and is the most widely deployed image-based people screening solution.

HOW SECURE 1000 TECHNOLOGY WORKS

A Backscatter image is produced as a result of Compton Scattering. When the emitted beam contacts organic materials, it is "scattered back" toward the system. The information is received by high resolution detectors and passed to advanced image processing software to display both organic and inorganic materials to the operator while protecting the privacy of the person being screened.

Features & Options

The **Rapiscan Secure 1000®** incorporates design improvements that resulted from a deployment of the system at London Heathrow Airport. The Secure 1000 is the first backscatter personnel screening solution to be deployed in the civil aviation environment.

Remote Workstation

Detection Enhancing Back Panel

Applications

AVIATION SECURITY

MILITARY BASE SECURITY

CORRECTIONAL FACILITIES

BORDER CROSSINGS

Rapiscan® systems

An OSI Systems Company

Rapiscan Secure 1000®

PEOPLE SCREENING

USA
3232 W. El Segundo Blvd.
Hawthorne, California 90250
UNITED STATES of AMERICA
Tel: +1 310-978-1457
Fax: +1 310-349-2491

UNITED KINGDOM
X-Ray House
Bonehurst Road
Salfords
Surrey RH1 5GG
UNITED KINGDOM
Tel: +44 (0) 870-7774301
Fax: +44 (0) 870-7774302

ASIA PACIFIC
240 Macpherson Road
#06-04 Pines Industrial Building
Singapore 348574
SINGAPORE
Tel: +65-6743-9892
Fax: +65-6743-9885 / 6743-9915

E-MAIL
sales@rapiscansystems.com

ISO 9001:2000 Certified

SPECIFICATIONS	
Regulatory Compliance & Safety	The Rapiscan Secure 1000® complies with the applicable FDA requirements and ANSI Standards. The FDA has classified the Rapiscan Secure 1000 as a device under Section 201(h) of the Federal Food Drug and Cosmetic Act (FFDCA) and the safety of the product is addressed by the provisions of Subchapter C – Electronic Product Radiation Control. The Rapiscan Secure 1000 has been assigned the FDA Succession number 9110663-03. The ANSI Standard is N43.17 and is titled "Radiation Safety for Personnel Screening Systems Using X-ray".
CE Compliant	Yes
Image Acquisition	Scan rate: Less than 8 seconds per view Display: 17 inch high-resolution color monitor Emission Per Scan: Less than 10 microRem per exam
Power Specifications	115V systems: 115V single phase, 60Hz, 12 Amps 230V Systems: 220-240V single phase, 50/60Hz, 6 Amps
Operating Environment	Storage Temperature: 0°C to 50°C Operating Temperature: 0°C to 40°C Relative Humidity: 5 to 95% non-condensing
Physical Details	Floor Space: 6.6 ft. wide x 8.8 ft. length (2001 x 2691 mm) in front Overhead Clearance: 80 in. (204 cm) minimum Unit Weight: 1097 pounds (499 kilograms) Physical Dimensions: 50 in. wide x 37 in. deep x 85 in. high (1261 x 951 x 2184 mm)
Warranty	One year

X-RAY COMPARISONS

The following are some of the typical exposure levels that can be experienced with other types of X-ray systems and some naturally occurring sources:

Medical CT (CAT Scan): Up to 1,000,000 microRem Chest, Mammography: Up to 10,000 microRem Background Radiation Denver (5000 ft): Up to 600 microRem per day Miami (sea level): Up to 300 microRem per day Inside vs. outside a building: Up to 25 microRem per day Airline Passenger Dose One hour flight: Up to 500 microRem per hour	Rapiscan Secure 1000® Less than 10 microRem per exam

PHYSICAL DIMENSIONS (Units in mm and inches)

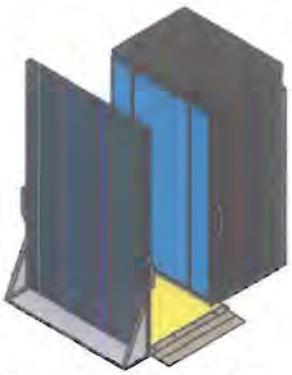

Shown with Optional Back Panel

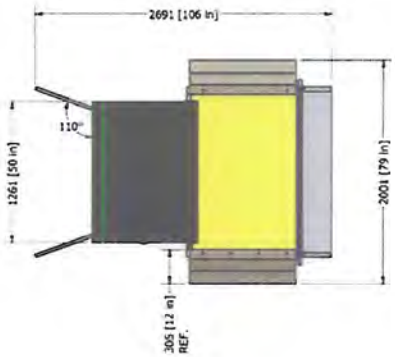

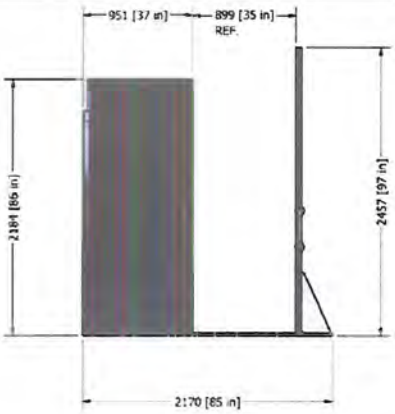

9150068-4

www.rapiscansystems.com

CUSTOMER SUPPORT SERVICES: Our team is dedicated to providing a prompt, effective and personalized response that exceeds your expectations. With spare parts inventory and skilled technicians all over the world, you can be certain Rapiscan Systems will always be prepared with a solution to address your requirements. By measuring response time, parts delivery and support status, our team embraces a customer centric philosophy to ensure continual improvement of our products and services.

With continual development of our products Rapiscan Systems reserves the right to amend specifications without notice.

People Screening System:

SPECIFICATIONS	RAPISCAN SECURE 1000
PHYSICAL SPECIFICATIONS	
Floor Space	6.6FT X 8.8 FT
Approx. Weight	1097 lbs
System Power	115VAC/230VAC
IMAGE ACQUISITION	
Scan Rate	Less than 8seconds per view
Monitor	17" CRT Color, non-flicker
Emission per scan	< 10microRem per exam
OPERATING ENVIRONMENT	
Storage Temperature	0°C TO 50°C
Operating Temperature	0°C TO 40°C
Relative Humidity	5 to 95%, non-condensing

BAGGAGE & PARCEL SPECIFICATIONS	RAPISCAN 620	AUTOCLEAR 100100T	GEMINI
		101z	
		$105,000	
		101xlz	
Cost	$ 369,000.00	$115,000	
Production Time	included	6-8 Weeks	
Multienergy Organig Stripping		$ 34,000.00	
Freight			
Ocean	included	$ 2,000.00	
Air	included	$ 4,000.00	