Tab A

HEADQUARTERS
MULTI-NATIONAL CORPS - IRAQ
BAGHDAD, IRAQ
APO AE 09342

REPLY TO
ATTENTION OF

AUG 19 2007

FICI-JA-AL

MEMORANDUM THRU Commander, MNF-I

FOR Commander, USCENTCOM

SUBJECT: Review of Investigation of Friendly Fire Incident on 8 May 2007 in which a US Soldier Shot and Killed a Third Country National/DOD Contractor Truck Driver

1. I am satisfied that all issues specified by the appointment orders have been adequately addressed and that the actions taken by the Commander of 13th Sustainment Command (Expeditionary) and subordinate commanders are appropriate. Commanders have implemented appropriate administrative and operational measures to help prevent similar occurrences.

2. However, the incident highlights the importance of coordination and communication among US Forces and US contractors. I am particular concerned that the unit's SOP apparently allows for a third country national truck driver to be removed from a convoy and instructed to return to a base without any escort. I am forwarding this matter to MNC-I AT/FP for their review and recommendations. I also am directing the Commander of the 316th ESC to review this investigation and their procedures and to coordinate with MNC-I AT/FP and the contractor on all issues of concern.

3. Point of contact for this memorandum is CPT (b)(3)(b)(6), MNC-I OSJA, Administrative Law, DSN (b)(2)High or at email (b)(3)(b)(6)@iraq.centcom.mil.

(b)(3)(b)(6)

RAYMOND T. ODIERNO
Lieutenant General, USA
Commanding

CF:
316th ESC Commander
13th SC(E) Commander
MNC-I CSM
MNC-I AT/FP
MNC-I Safety

Tab B

DEPARTMENT OF THE ARMY
HQ, 358th CIVIL AFFAIRS BRIGADE FORWARD
CAMP SLAYER
APO AE 09342

REPLY TO
ATTENTION OF:

AOCP-CAC-JA

28 July 2007

MEMORANDUM FOR COMMANDER, MNC-I, Camp Victory, Iraq, APO AE 09342

SUBJECT: Legal Review of AR 15 – 6 Investigation Concerning the Death of a Third Country National during Convoy Operations, 714th Transportation Company, 524th Combat Sustainment Support Battalion, 45th Sustainment Brigade

1. I have reviewed the AR 15 – 6 Investigation regarding the escalation of force event resulting in the death of (b)(6) a third country national. I also have reviewed the Legal Review conducted by OSJA 13th Sustainment Command and the forwarding correspondence of the chain of command.

2. I find the investigation legally sufficient.

a. The investigation contains no procedural errors which materially prejudice any party involved in the investigation.

b. The evidence supports the investigating officer's findings.

c. The recommendations are supported by the findings and evidence.

3. The Point of Contact for this Memorandum is the undersigned at DSN (b)(2)High or (b)(3)(b)(6) @iraq.centcom.mil (NIPR)

(b)(3)(b)(6)

DEPARTMENT OF THE ARMY
HEADQUARTERS, 13th SUSTAINMENT COMMAND (EXPEDITIONARY)
LSA ANACONDA, IRAQ
APO AE 09391

REPLY TO
ATTENTION OF:

AFVG-JA

21 June 2007

MEMORANDUM FOR Commanding General, 13th Sustainment Command (Expeditionary), LSA ANACONDA, Iraq APO AE 09391

SUBJECT: Legal Review of Informal AR 15-6 Investigation Concerning the Death of a Third Country National during Convoy Operations, 714th Transportation Company, 524th Combat Sustainment Support Battalion, 45th Sustainment Brigade

1. Legal Review. I completed a legal review of the above-referenced informal AR 15-6 investigation in accordance with AR 15-6, Procedure for Investigating Officers and Boards of Officers, paragraph 2-3b. Based on this investigation, I determined the investigation complies with the legal requirements of AR 15-6. No legal errors are present that invalidate the investigation. Sufficient evidence supports the findings of the Investigating Officer (IO). However, the recommendations may be supplemented based on further information from the investigating officer. The 13th Sustainment Command (Expeditionary) Commanding General should sign the forwarding memorandum to the Commander, Multi-National Corps Iraq.

2. Facts. On 8 May 2007, a convoy from the 714th Transportation Company was traveling along (b)(2)High One of the third country national (TCN) drivers, (b)(6) started driving erratically, speeding and passing the other vehicles in the convoy. The convoy commander stopped the convoy and told (b)(6) that based on his unsafe driving, he was to leave the convoy and return to Habur Gate. While the convoy was stopped, the gunner in the convoy commander's vehicle saw (b)(6) point to a 9 millimeter weapon one of the Soldiers was wearing, point his finger to his head like he was holding the weapon, and act as if he was firing it. No one else saw (b)(6) do this. Neither the gunner nor convoy commander questioned him about why he did that. There is no evidence supporting any suicidal ideation by (b)(6). When the convoy commander talked to (b)(6), he did not use an interpreter, but he was convinced that (b)(6) understood that he should return. He said that (b)(6) did not display any actions or communicate in any manner that he did not understand what he was suppose to do.

3. Findings and Recommendations. Please review the investigating officer's memorandum of Findings and Recommendations attached to the DA Form 1574.

4. Discussion. The findings are supported by sufficient facts. The IO's recommendation is to take no further action which is appropriate. The investigation is legally sufficient. However, based on the additional information there are possible recommendations to prevent a future similar incident. The following is a discussion of salient points from the investigation for making further recommendations:

a. One point from this investigation that is not directly referenced by the IO is that this incident was initiated by the Soldiers as an escalation of force (EOF) and turned out to be a friendly fire incident (FFI). When the vehicle approached the convoy, the Soldiers did not know that it was a friendly vehicle. The communications between the TCN vehicles and the Soldiers is ineffective or not present. The Soldiers appropriately responded to the approaching vehicle with EOF procedures. Their underlying thought process was that no one was entering the convoy after check point 5. Underlying this is whether the TCN driver had the same understanding. We will never know what (b)(6) was thinking, but much can be learned from what his employer briefed and trained the TCN drivers on concerning convoy operations. It would be appropriate to recommend that the contractor hiring (b)(6) remind its drivers the appropriate steps for reentering a convoy. This death may have been avoidable if the TCN driver understood and followed the correct procedures.

b. Prior to (b)(6) death and at check point 3 on the convoy route, he was told by the convoy commander that he would not continue in the convoy because of his erratic driving. After check point 5, (b)(6) attempted to rejoin the convoy. However, without appropriate communications with the convoy, the last gun truck did not know that an approaching vehicle was (b)(6) attempting to reenter the convoy. The gunner appropriately responded using escalation of force steps. When (b)(6) failed to respond to the EOF steps, the gunner fired his weapon to stop the vehicle. As a result, (b)(6) was killed. Without appropriate communications between (b)(6) and the convoy, the convoy had no idea that the approaching vehicle was a friendly.

d. Communications between the TCN drivers and the convoy is an on-going concern. Since the TCN drivers do not have communication links with the convoy, there was no manner in which the TCN driver could communicate that he was trying to reenter the convoy. Without the ability to contact the convoy, he tried to re-enter with no viable means for the convoy to distinguish him from the enemy. The additional statement from the IO indicates that (b)(6) was told and appeared to understand that he was to turn around and go back to Habur Gate. He may not have fully understood the repercussions for trying to reenter the convoy after check point 5. However, the additional statement supports that the drivers were briefed prior to the convoy start on the procedures for the convoy, including driving standards and the possibility of being released from the convoy for failing to meet those standards.

(b)(5)

6. The point of contact for this action is the undersigned at DSN: (b)(2)High or by email at (b)(3)(b)(6) @balad.iraq.centcom.mil.

FOR THE STAFF JUDGE ADVOCATE:

(b)(3)(b)(6)

LTC, JA
Deputy Staff Judge Advocate

(b)(2)High, (b)(3)(b)(6)

Classification: ~~SECRET//FOR OFFICIAL USE ONLY~~ (U)
Thank you very much.

I think this will work. I do have one final question. What communicate devises do the TCNs have to link them to the rest of the convoy? ie radio communication.

Thanks again.

(b)(3)(b)(6)

Classification: ~~SECRET//FOR OFFICIAL USE ONLY~~ (U)

From: (b)(3)(b)(6) CPT 45 SBDE Surg Cell [mailto (b)(3)(b)(6) @s-iraq.centcom.smil.mil]
Sent: Tuesday, June 19, 2007 11:28 AM
To: (b)(3)(b)(6) MAJ 657th ASG SJA Sr Opnl Admin Law Attorney; (b)(3)(b)(6) CPT 45 SBDE JAG
Subject: [SECRET] RE: [U] AR 15-6 Investigation into TCN Death

Classification: ~~SECRET~~ (U)
LTC (b)(3)(b)(6)

Don't worry I've been called (b)(3)(b)(6) for years. I hope this answers your questions.

1. When you interviewed the convoy commander, SSG (b)(3)(b)(6) what did he say about what the TCN driver understood about having his placard taken and going back to Habur Gate? How did he know the TCN understood? SSG (b)(3)(b)(6) and SPC (b)(3)(b)(6) felt that the TCN understood, because all TCN drivers were briefed by the CLP interpreter prior to SP during the TCN mission brief. They also felt he understood because after his placard he didn't immediately try to reenter the convoy.

2. For what company did the TCN driver work? What does the company tell the drivers about getting "released" from a convoy and not trying to re-enter? The TCN driver worked for SERKA. The SERKA Company briefs their drivers on the standing convoy procedures, but before every mission the CLP interpreter briefs all TCN drivers at the mission brief.

IAW 524 CSSB/ 714TC's/ 571st MCT convoy procedures:

(b)(2)High

3. What does that company tell the drivers about when they can reenter, for example, checkpoints 1-4? IAW 524 CSSB/ 714TC's/ 571st MCT convoy procedures if a TCN vehicle has any problems prior to CP # 5 (i.e. CP 1-4), they pull off to the side and the Convoy Commander or another Gun Truck will assess the situation. Once a TCN vehicles placard has been pulled it will not reenter the convoy under any circumstance. If they attempt to rejoin the convoy the gun truck will employ EOF procedures to stop them.

4. Did SSG (b)(3)(b)(6) have anyone with him that could interpret/communicate in the driver's native language? Yes, the CLP interpreter but he wasn't in the CC vehicle. The driver made no gestures to the CC that he didn't understand what was happening.

(b)(3)(b)(6)

Classification: ~~SECRET~~ (U)

From: (b)(3)(b)(6) MAJ 657th ASG SJA Sr Opnl Admin Law Attorney
[mailto (b)(3)(b)(6) @balad.iraq.centcom.smil.mil]
Sent: Monday, June 18, 2007 6:33 PM
To: (b)(3)(b)(6) T 45 SBDE Surg Cell
Cc: CPT 45 SBDE JAG
Subject: [U] AR 15-6 Investigation into TCN Death

Classification: UNCLASSIFIED//FOR OFFICIAL USE ONLY
CPT (b)(3)(b)(6),

First let me apologize. On my NIPR email, I inadvertently called you CPT (b)(3)(b)(6) My bad!

I am reviewing the AR 15-6 investigation you did into the death of a TCN. The investigation is excellent and very complete. I appreciate your effort on this investigation. Since it is going up to MNC-I, we want to make sure that we didn't miss any details. I have a couple of questions that I am hoping you can answer or can get the answers to:

1. When you interviewed the convoy commander. SSG (b)(3)(b)(6) what did he say about what the TCN driver understood about having his placard taken and going back to Habur Gate? How did he know the TCN understood?

2. For what company did the TCN driver work? What does the company tell the drivers about getting "released" from a convoy and not trying to re-enter?

3. What does that company tell the drivers about when they can reenter, for example, checkpoints 1-4?

4. Did SSG (b)(3)(b)(6) have anyone with him that could interpret/communicate in the driver's native language?

Can you answer these questions based on previous interviews?

If not, please see what you can do about getting the answers.

If you respond by email, that will be sufficient to include your responses in the investigation without re-writing anything. I do need this as quickly as possible.

Thank you,

(b)(3)(b)(6)
LTC, JA
Deputy Staff Judge Advocate
13th SC (E)
318-438-2213

Classification: UNCLASSIFIED//~~FOR OFFICIAL USE ONLY~~

From: (b)(3)(b)(6) CPT 45 SBDE JAG [mailto (b)(3)(b)(6) @s-iraq.centcom.smil.mil]
Sent: Monday, June 18, 2007 6:19 PM
To: (b)(3)(b)(6) 657th ASG SJA Sr Opnl Admin Law Attorney
Cc: CPT 45 SBDE Surg Cell
Subject: [UNCLASSIFIED//FOR OFFICIAL USE ONLY] POC

Classification: UNCLASSIFIED//~~FOR OFFICIAL USE ONLY~~
Ma'am,

CPT (b)(3)(b)(6) may be reached at the address in the Cc line.

Vir,
CPT (b)(3)(b)(6)
Brigade Judge Advocate
45th SB - 13th SC (E)
Q-West Base Complex, Iraq
VOIP
DSN (b)(2)High

Classification: UNCLASSIFIED//~~FOR OFFICIAL USE ONLY~~

APVG-WZO-JA 13 June 2007

MEMORANDUM FOR Commander, 45th Sustainment Brigade, Q-West Base Complex, Iraq, APO AE 09351

SUBJECT: Legal Review of AR 15-6 Investigation Concerning FFI (8 May 2007)

1. I have completed a legal review of the above referenced informal AR 15-6 investigation conducted by CPT (b)(3)(b)(6) in accordance with AR 15-6, Procedure for Investigating Officers and Boards of Officers, paragraph 2-3b. I determine that the investigation complies with the legal requirements of AR 15-6. No legal errors are present. Sufficient evidence supports the findings and the recommendation is consistent with the findings.

2. I recommend concurring with the IO's findings and recommendation, and forwarding thru 13th SC(E) to the Approval Authority, CG, MNC-I.

3. The POC for this memorandum is the undersigned at VOIP (b)(2)High or (b)(3)(b)(6) @iraq.centcom.mil.

(b)(3)(b)(6)

CPT, JA
Brigade Judge Advocate

Tab C

DEPARTMENT OF THE ARMY
HEADQUARTERS, 13th SUSTAINMENT COMMAND (EXPEDITIONARY)
LSA ANACONDA, IRAQ
APO AE 09391

REPLY TO
ATTENTION OF

AFVG-CG

MEMORANDUM FOR Commanding General, Multi-National Corps-Iraq, CAMP VICTORY, Iraq, APO, AE 09342

SUBJECT: Informal AR 15-6 Investigation Concerning the Death of a Third Country National during Convoy Operations, 714th Transportation Company, 524th Combat Sustainment Support Battalion, 45th Sustainment Brigade

1. I reviewed the above referenced AR 15-6 investigation into the death of (b)(6) (b)(6), a third country national driver. I concur with all of the findings of the Investigating Officer and am providing additional recommendations.

2. My recommendations are based on the investigating officer's additional information regarding (b)(6) release from the convoy related to the communication links between TCN drivers and the convoy. Contractors should continue to emphasize to the TCN drivers the dangers associated with attempting to reenter a convoy at any time, and particularly after the final entry checkpoint. Additionally, they need to continually remind the TCN drivers of expected driving standards and ramifications if they attempt to enter a convoy after the final checkpoint. This may reduce the possibility of similar future incidents.

3. This accident was preventable, and I will take steps to ensure contractors continue to brief driving standards and how to approach and reenter a convoy.

(b)(3)(b)(6)

Brigadier General, USA
Commanding

DEPARTMENT OF THE ARMY
HEADQUARTERS, 45TH SUSTAINMENT BRIGADE
Q-WEST BASE COMPLEX, IRAQ
APO AE 09351

REPLY TO
ATTENTION OF

APVG-WZO-CO

JUN 13 2007

MEMORANDUM THRU Commanding General, 13th Sustainment Command (Expeditionary), LSA Anaconda, Iraq, APO AE 09391

FOR Commanding General, Multi-National Corps-Iraq, Baghdad, Iraq, APO AE 09342

SUBJECT: Army Regulation 15-6 Investigation (8 May 2007 / 524th CSSB)

I have reviewed the findings and recommendations of the Investigating Officer (IO), CPT (b)(3)(b)(6) regarding the death of a third country national driver killed in an FFI incident on 8 May 2007. I concur with the IO's findings and recommendation, and respectfully recommend approval.

(b)(3)(b)(6)

COL, OD
Commanding

Tab D

Index

1. Appointment orders
2. Completed DA 1574
3. MFR
4. Enclosure I – Sworn Statement SPC
5. Enclosure II– Sworn Statement SPC
6. Enclosure III– Sworn Statement SS
7. Enclosure IV– Sworn Statement SG
8. Enclosure V– Sworn Statement SPC
9. Enclosure VI – SIR #1167
10. Enclosure VII- 13SC EOF Policies and Procedures
11. Enclosure VIII- EOF Definitions
12. Enclosure IX- 524th CSSB Sworn Statements
13. Enclosure X- EOF Diagram
14. Enclosure XI- Map

(b)(3)(b)(6)

Tab 1

DEPARTMENT OF THE ARMY
HEADQUARTERS, 45TH SUSTAINMENT BRIGADE
Q-WEST BASE COMPLEX, IRAQ
APO AE 09351

REPLY TO
ATTENTION OF

APVG-WZO-CO

MAY 09 2007

MEMORANDUM FOR CPT Owen Roberts, HHC, 45th Special Troops Battalion, 45th Sustainment Brigade, Q-West Base Complex, Iraq, APO AE 09351

SUBJECT: Appointment as Army Regulation 15-6 Investigating Officer

1. You are hereby appointed an Investigating Officer (IO) pursuant to Army Regulation (AR) 15-6, para 2-1. You are to perform an informal investigation into an Escalation of Force incident which occurred on 8 May 2007 involving 524th CSSB personnel resulting in the death of a third country national.

2. During the course of your investigation you will, at a minimum:

- Determine whether proper escalation of force procedures (EOF) were used. Specifically, identify what force was employed at what corresponding distance.

- Determine the cause of death of the deceased.

- Interview SSG (b)(3)(b)(6), Convoy Commander.

- Interview SPC (b)(3)(b)(6)

3. Your duties as an investigating officer will take priority over other duties. You will use the informal investigation procedures detailed in AR 15-6, paragraph 4-1, *et seq.* You will make specific findings of facts that are supported directly by the documented evidence or reasonably based upon circumstantial evidence. Based upon all factual findings and conclusions, you will make recommendations on all relevant issues you identify in the course of your investigation.

4. If, during your investigation, you suspect that persons you intend to interview may have violated any provision of the Uniform Code of Military Justice (UCMJ) or any other criminal law, you must advise them of their rights under Article 31, UCMJ. Rights warnings and waivers will be documented on DA Form 3881. If during an interview you begin to suspect criminal conduct on the part of the witness, you must stop the interview and advise him or her of his or her rights under Article 31, UCMJ.

5. Whenever possible, witness statements will be sworn and recorded on DA Form 2823. If you conduct any witness interviews telephonically, you will prepare a memorandum for record memorializing the interview. You should also obtain Privacy

Act Statements from all witnesses. Prepare your report using DA Form 1574. Include with your report all documentary evidence, sworn statements, and other information or evidence you considered as a basis for your findings and recommendations.

6. Before proceeding with the investigation, contact the Brigade Judge Advocate, 45th SB at VOIP (b)(2)High; he will serve as your legal advisor for this investigation and will provide you with an initial legal briefing.

7. Submit your findings and recommendations to the undersigned on DA Form 1574 no later than 20 May 2007.

(b)(3)(b)(6)

COL, OD
Commanding

HEADQUARTERS
MULTI-NATIONAL CORPS-IRAQ
BAGHDAD, IRAQ
APO AE 09342

REPLY TO
ATTENTION OF

MAY 17 2007

FICI-JA-AL

MEMORANDUM FOR Captain (b)(3)(b)(6) Headquarters and Headquarters Company, 45th Special Troops Battalion, 45th Sustainment Brigade, Q-West Base Complex, Iraq APO AE 09351

SUBJECT: Appointment as Investigating Officer Concerning the Friendly Fire Incident of 8 May 2007 involving 524th CSSB

1. **Appointment.** You are appointed under the provisions of AR 15-6 and DODI 6055.7 and subordinate command orders and directives to conduct a complete and thorough investigation of the friendly fire incident (FFI) involving 524th CSSB. Your original appointment dated 9 May 2007 is incorporated in this appointment (Encl 1).

2. **Purpose.** This investigation is administrative in nature to accomplish a collateral legal investigation focused on the facts and circumstances of friendly fire, whether all procedural requirements relative to a friendly fire investigation have been met, and to assess potential individual and organizational responsibility for the incident.

3. **Duty.** Your duty is to determine all facts and circumstances of the FFI and to "ascertain and consider the evidence on all sides of each issue, thoroughly and impartially, and to make findings and recommendations that are warranted by the facts and that comply with these instructions". AR 15-6, para. 1-6.

4. **Standards.** Determine and reference all relevant laws, standards, policies, procedures, and customs and practices. In preparing your report, take care to properly identify and segregate all classified information. Also, be sensitive to any Privacy Act issues that may arise during the course of your investigation.

5. **Priority of Investigations.** Criminal and Safety investigations take priority. Confirm whether a safety investigation has been appointed by any command and determine whether a criminal investigation by the Criminal Investigation Division Command is underway. Promptly advise me of the status of any criminal and safety investigation, and if such investigations are not underway, advise me whether either investigation should be initiated.

6. **Specific Areas of Concern.** In addition to addressing the general facts and circumstances and any matter you think relevant, investigate the following additional issues:

a. Thoroughly document the operational and casualty channels reporting timeline. Immediately ensure operational and casualty report is accurate.

b. Coordinate your investigation with MNC-I Safety and the Criminal Investigation Division.

c. Gather all facts regarding the incident.

d. Preserve and examine all physical evidence (and refer physical evidence to appropriate agencies for forensic examination as appropriate).

e. Evaluate mission planning and whether any command errors were made in planning, review of the plan, and execution of the plan.

f. Examine and explain convoy procedures for accountability of vehicles, communication, and safety when vehicles fall out of a convoy; and procedures for re-entering convoys.

g. Determine if the unit failed to observe any relevant convoy operation standards, policies, or procedures.

h. Evaluate Escalation of Force (EOF) procedures. Did the Soldier perceive a hostile act or a demonstration of hostile intent? If so, what specific events occurred that led the Soldier to perceive a hostile act or hostile intent? In light of the circumstances faced and the applicable ROE, were the Soldier's acts reasonable? Explain the basis for your determination (cite all supporting facts and explain your rationale).

i. Did the unit properly follow its EOF procedures, ROE, and TTPs?

j. What techniques and procedures did the unit and convoy use to identify friendly forces and vehicles falling out of the convoy? Was the approaching truck clearly marked?

k. Were the EOF measures and equipment, ROE, and unit TTPs sufficient? Were there any deficiencies in the utility or execution of the TTPs or in the TTPs themselves under the circumstances?

l. When did the unit last receive EOF training? If possible, provide a copy of any training materials as an enclosure to your investigation.

m. Did the unit provide timely and adequate medical assistance?

n. Could any individual, unit, or systemic measures have prevented this incident? Specifically assess whether similar factors were involved in prior reported incidents of Friendly Fire from the 45th Sustainment Brigade (Encl 2).

o. Assess responsibility and accountability and determine whether disciplinary action is warranted.

p. Ensure that all casualty reports are accurate according to the latest available information.

7. **Primary Responsibility.** This duty as an investigating officer takes priority over other duties.

8. **Suspense.** You have 20 days to complete your inquiry and investigation. Submit the original report to your legal advisor for review. Requests for extension may be requested.

9. **Procedures.** Follow the informal investigative procedures of AR 15-6. Whenever possible, witness statements will be sworn and recorded on DA Form 2823. All persons will complete a Privacy Act statement. If you conduct any witness interviews telephonically, prepare a memorandum of record memorializing the interview. Use DA Form 1574 to prepare your report. Include with your report all documentary evidence, photographs, diagrams, sworn statements, and all other information or evidence you considered as a basis for your findings and recommendations.

10. **Administrative Support.** You may associate and assign a member of your staff to assist you; e.g., to gather documents, to participate with you during interviews, to help organize and prepare the report, etc. You must, however, personally conduct all interviews of witnesses with personal knowledge of the incident ("fact witnesses").

11. **Chronology of Investigation.** Maintain a detailed chronology of your investigative activities and include it as an exhibit to your report.

12. **Possible Criminal Conduct.** If at any time during your investigation you suspect the person you are interviewing or you intend to interview of any misconduct, which may violate any provision of the Uniform Code of Military Justice (UCMJ) or any other criminal law or policy, you must advise them of their rights under Article 31, UCMJ, before continuing with further questioning. Document rights warnings and waivers on DA Form 3881.

13. **Legal Advice.** Captain (b)(3)(b)(6) will serve as your legal advisor at SVOIP (b)(2)High or (b)(3)(b)(6) @iraq.centcom.smil.mil).

FOR THE COMMANDER:

for (b)(3)(b)(6)

2 Encls
as

JOSEPH ANDERSON
Brigadier General, USA
Chief of Staff

Tab 2

Tab 3

REPORT OF PROCEEDINGS BY INVESTIGATING OFFICER/BOARD OF OFFICERS

For use of this form, see AR 15-6; the proponent agency is OTJAG.

IF MORE SPACE IS REQUIRED IN FILLING OUT ANY PORTION OF THIS FORM, ATTACH ADDITIONAL SHEETS

SECTION I - APPOINTMENT

Appointed by Brigadier General Joseph Anderson, Chief of Staff
(Appointing authority)

on 17 May 2007 *(Date)* *(Attach inclosure 1: Letter of appointment or summary of oral appointment data.) (See para 3-15, AR 15-6.)*

SECTION II - SESSIONS

The *(investigation) (board)* commenced at FOB Q- WEST IRAQ *(Place)* at 1600 *(Time)*

on 18 May 2007 *(Date)* *(If a formal board met for more than one session, check here* ☐ *. Indicate in an inclosure the time each session began and ended, the place, persons present and absent, and explanation of absences, if any.)* The following persons *(members, respondents, counsel)* were present: *(After each name, indicate capacity, e.g., President, Recorder, Member, Legal Advisor.)*

The following persons *(members, respondents, counsel)* were absent: *(Include brief explanation of each absence.) (See paras 5-2 and 5-8a, AR 15-6.)*

The *(investigating officer) (board)* finished gathering/hearing evidence at 1600 *(Time)* on 12 June 2007 *(Date)*

and completed findings and recommendations at 1600 *(Time)* on 12 June 2007 *(Date)*

SECTION III - CHECKLIST FOR PROCEEDINGS

A. COMPLETE IN ALL CASES	YES	NO 1/	NA 2/
1 Inclosures *(para 3-15, AR 15-6)*			
Are the following inclosed and numbered consecutively with Roman numerals: *(Attached in order listed)*			
a. The letter of appointment or a summary of oral appointment data?	☒	☐	
b. Copy of notice to respondent, if any?*(See item 9, below)*	☐	☐	☒
c. Other correspondence with respondent or counsel, if any?	☐	☐	☒
d. All other written communications to or from the appointing authority?	☐	☐	☒
e. Privacy Act Statements *(Certificate, if statement provided orally)*?	☒	☐	☐
f. Explanation by the investigating officer or board of any unusual delays, difficulties, irregularities, or other problems encountered *(e.g., absence of material witnesses)*?	☐	☐	☒
g. Information as to sessions of a formal board not included on page 1 of this report?	☐	☐	☒
h. Any other significant papers *(other than evidence)* relating to administrative aspects of the investigation or board?	☐	☐	☒

FOOTNOTES: 1/ Explain all negative answers on an attached sheet.
2/ Use of the N/A column constitutes a positive representation that the circumstances described in the question did not occur in this investigation or board.

		YES	NO 1/	NA 2/
2	Exhibits *(para 3-16, AR 15-6)*			
	a. Are all items offered *(whether or not received)* or considered as evidence individually numbered or lettered as exhibits and attached to this report?	☒	☐	☐
	b. Is an index of all exhibits offered to or considered by investigating officer or board attached before the first exhibit?	☒	☐	☐
	c. Has the testimony/statement of each witness been recorded verbatim or been reduced to written form and attached as an exhibit?	☒	☐	☐
	d. Are copies, descriptions, or depictions *(if substituted for real or documentary evidence)* properly authenticated and is the location of the original evidence indicated?	☐	☐	☒
	e. Are descriptions or diagrams included of locations visited by the investigating officer or board *(para 3-6b, AR 15-6)?*	☐	☐	☒
	f. Is each written stipulation attached as an exhibit and is each oral stipulation either reduced to writing and made an exhibit or recorded in a verbatim record?	☐	☐	☒
	g. If official notice of any matter was taken over the objection of a respondent or counsel, is a statement of the matter of which official notice was taken attached as an exhibit *(para 3-16d, AR 15-6)?*	☐	☐	☒
3	Was a quorum present when the board voted on findings and recommendations *(paras 4-1 and 5-2b, AR 15-6)?*	☐	☐	☒
	B. COMPLETE ONLY FOR FORMAL BOARD PROCEEDINGS *(Chapter 5, AR 15-6)*			
4	At the initial session, did the recorder read, or determine that all participants had read, the letter of appointment *(para 5-3b, AR 15-6)?*	☐	☐	
5	Was a quorum present at every session of the board *(para 5-2b, AR 15-6)?*	☐	☐	
6	Was each absence of any member properly excused *(para 5-2a, AR 15-6)?*	☐	☐	☐
7	Were members, witnesses, reporter, and interpreter sworn, if required *(para 3-1, AR 15-6)?*	☐	☐	☐
8	If any members who voted on findings or recommendations were not present when the board received some evidence, does the inclosure describe how they familiarized themselves with that evidence *(para 5-2d, AR 15-6)?*	☐	☐	☐
	C. COMPLETE ONLY IF RESPONDENT WAS DESIGNATED *(Section II, Chapter 5, AR 15-6)*			
9	Notice to respondents *(para 5-5, AR 15-6)*:			
	a. Is the method and date of delivery to the respondent indicated on each letter of notification?	☐	☐	
	b. Was the date of delivery at least five working days prior to the first session of the board?	☐	☐	
	c. Does each letter of notification indicate —	☐	☐	
	(1) the date, hour, and place of the first session of the board concerning that respondent?	☐	☐	
	(2) the matter to be investigated, including specific allegations against the respondent, if any?	☐	☐	
	(3) the respondent's rights with regard to counsel?	☐	☐	
	(4) the name and address of each witness expected to be called by the recorder?	☐	☐	
	(5) the respondent's rights to be present, present evidence, and call witnesses?	☐	☐	
	d. Was the respondent provided a copy of all unclassified documents in the case file?	☐	☐	
	e. If there were relevant classified materials, were the respondent and his counsel given access and an opportunity to examine them?	☐	☐	☐
10	If any respondent was designated after the proceedings began *(or otherwise was absent during part of the proceedings)*:			
	a. Was he properly notified *(para 5-5, AR 15-6)?*	☐	☐	☐
	b. Was record of proceedings and evidence received in his absence made available for examination by him and his counsel *(para 5-4c, AR 15-6)?*	☐	☐	☐
11	Counsel *(para 5-6, AR 15-6)*:			
	a. Was each respondent represented by counsel?	☐	☐	
	Name and business address of counsel:			
	(If counsel is a lawyer, check here ☐)			
	b. Was respondent's counsel present at all open sessions of the board relating to that respondent?	☐	☐	☐
	c. If military counsel was requested but not made available, is a copy *(or, if oral, a summary)* of the request and the action taken on it included in the report *(para 5-6b, AR 15-6)?*	☐	☐	☐
12	If the respondent challenged the legal advisor or any voting member for lack of impartiality *(para 5-7, AR 15-6)*:			
	a. Was the challenge properly denied and by the appropriate officer?	☐	☐	☐
	b. Did each member successfully challenged cease to participate in the proceedings?	☐	☐	☐
13	Was the respondent given an opportunity to *(para 5-8a, AR 15-6)*:			
	a. Be present with his counsel at all open sessions of the board which deal with any matter which concerns that respondent?	☐	☐	
	b. Examine and object to the introduction of real and documentary evidence, including written statements?	☐	☐	☐
	c. Object to the testimony of witnesses and cross-examine witnesses other than his own?	☐	☐	☐
	d. Call witnesses and otherwise introduce evidence?	☐	☐	
	e. Testify as a witness?	☐	☐	
	f. Make or have his counsel make a final statement or argument *(para 5-9, AR 15-6)?*	☐	☐	
14	If requested, did the recorder assist the respondent in obtaining evidence in possession of the Government and in arranging for the presence of witnesses *(para 5-8b, AR 15-6)?*	☐	☐	☐
15	Are all of the respondent's requests and objections which were denied indicated in the report of proceedings or in an inclosure or exhibit to it *(para 5-11, AR 15-6)?*	☐	☐	☐

FOOTNOTES: 1/ *Explain all negative answers on an attached sheet.*
2/ *Use of the N/A column constitutes a positive representation that the circumstances described in the question did not occur in this investigation or board.*

SECTION IV - FINDINGS *(para 3-10, AR 15-6)*

The *(investigating officer) (board)* , having carefully considered the evidence, finds:

See attached Memorandum

SECTION V - RECOMMENDATIONS *(para 3-11, AR 15-6)*

In view of the above findings, the *(investigating officer) (board)* recommends:

See attached Memorandum

SECTION VI - AUTHENTICATION *(para 3-17, AR 15-6)*

THIS REPORT OF PROCEEDINGS IS COMPLETE AND ACCURATE. *(If any voting member or the recorder fails to sign here or in Section VII below, indicate the reason in the space where his signature should appear.)*

(b)(3)(b)(6)

(Recorder)	*(Investigating Officer) (President)*
(Member)	*(Member)*
(Member)	*(Member)*

SECTION VII - MINORITY REPORT *(para 3-13, AR 15-6)*

To the extent indicated in Inclosure _____, the undersigned do(es) not concur in the findings and recommendations of the board.

(In the inclosure, identify by number each finding and/or recommendation in which the dissenting member(s) do(es) not concur. State the reasons for disagreement. Additional/substitute findings and/or recommendations may be included in the inclosure.)

(Member)	*(Member)*

SECTION VIII - ACTION BY APPOINTING AUTHORITY *(para 2-3, AR 15-6)*

The findings and recommendations of the *(investigating officer) (~~board~~)* are *(approved) (~~disapproved~~) (~~approved with following exceptions/ substitutions~~). (If the appointing authority returns the proceedings to the investigating officer or board for further proceedings or corrective action, attach that correspondence (or a summary, if oral) as a numbered inclosure.)*

AUG 19 2007

(b)(3)(b)(6)

RAYMOND T. ODIERNO
Lieutenant General, US Army
Commanding

DEPARTMENT OF THE ARMY
HEADQUARTERS, 45th SUSTAINMENT BRIGADE
Q-WEST BASE COMPLEX, IRAQ
APO AE 09351

REPLY TO THE ATTENTION OF:

APVG-WZO-MD

12 June 2007

MEMORANDUM FOR Commander, Multi- National Corps-Iraq, Baghdad, Iraq APO AE 09342

SUBJECT: Army Regulation 15-6 Investigation

1. Background.

a. On the night of 8 May 2007 Tornado 12 of the 714 TC was conducting a Combat Logistics Patrol (CLP) from Habur Gate to Q West. The CLP consisted of 11 Gun Trucks (GT) and 88 TCN vehicles. The mission timeline was as follows: Vehicle Maintenance (1600- 1700), Mission Brief/ PCI/ PCC (1700- 1900), Serial Lineup (1900-1945), and SP (2000). At approximately 1700, the Convoy Commander (CC), SSG (b)(3)(b)(6) conducted a CLP mission brief that included the EOF procedures (Enclosure III Q4). At approximately 2200 hours, south of check point #3, the deceased (b)(6)) was driving erratically in and around the convoy. The CC confiscated his placard and instructed him to return to Habur Gate without incident (Enclosure IX Pg.33-34 SPC (b)(3)(b)(6) statement). At approximately 2230 hours, Tornado 12 stopped at check point #5 (b)(2)High to consolidate and reorganize IAW with unit SOP (Enclosure IX Pg.4 Q4). At this point the soldiers were aware that a TCN vehicle's placard had been pulled.

b. At approximately 2245 hours, just north of check point #6 (b)(2)High , GT 1 and GT 2 spotted a PIED forcing the CLP to halt. GT # 10 (Truck Commander- SGT Moffett, Driver- SPC (b)(3)(b)(6) Gunner- SPC (b)(3)(b)(6)) was in the rear of the convoy providing security and was approximately 1800 meters from the PIED site (Enclosure X diagram). They had been there for less than 10 minutes when the first vehicle (LN vehicle) requiring EOF procedures approached the convoy. SPC (b)(3)(b)(6) went through the first step of EOF (Enclosure V Q1) and the vehicle pulled over on the side of the road without incident.

c. At approximately 2300 hours, (b)(6) vehicle came into GT #10 gunner's sight approximately 300-400 meters away approaching the convoy at a very high rate of speed. SPC (b)(3)(b)(6) notified his TC, SGT (b)(3)(b)(6) and began to flash his light and laser to warn the oncoming driver of the convoy's presence. (b)(6) did not slow down despite the warnings. SPC (b)(3)(b)(6) continued to keep his TC abreast of the situation and continued to motion for the TCN driver to stop by using his light and laser mount. When the vehicle was approximately 150-100 meters away, his TC (SGT (b)(3)(b)(6)), ordered him to fire 3 small arm (M-16) tracer rounds to the left of the vehicle. SPC (b)(3)(b)(6) fired 3 tracer rounds from his M-16 to the left of the vehicle. The vehicle still did not slow down (Enclosure V Q1; X diagram).

When the TCN vehicle was approximately 100 meters away from GT# 10, SGT (b)(3)(b)(6) ordered SPC (b)(3)(b)(6) to charge his M2 and shoot the engine block. SPC (b)(3)(b)(6) fired the first burst of approximately 5-10 rounds toward the engine block and the vehicle did not slow down. At this point SGT (b)(3)(b)(6) ordered SPC (b)(3)(b)(6) to "eliminate the threat" (Enclosure IV Q1). The TCN vehicle was approximately 60-80 meters from the convoy, and SPC (b)(3)(b)(6) fired approximately 3 rounds from his M2 into the windshield of the TCN vehicle. The TCN vehicle finally rolled off the road and stopped approximately 10 – 20 meters away from GT#10.

d. At approximately 2305 the CLP medic SPC (b)(3)(b)(6) in GT#6 was notified to provide medical support to (b)(6) When SPC (b)(3)(b)(6) arrived on the scene, SGT (b)(3)(b)(6) and SGT (b)(3)(b)(6) (Assistant Convoy Commander) were attempting to put out a fire that had started in the vehicle. SGT (b)(3)(b)(6) removed the body from the vehicle and SPC (b)(3)(b)(6) determined that he was dead. SPC (b)(3)(b)(6) and the SGT (b)(3)(b)(6) conducted an inventory of (b)(6) personal effects (Enclosure IX Pg.30-31 SPC (b)(3)(b)(6) statement).

2. Findings.

a. The Criminal Investigation Division and Safety Office were briefed on the incident.

b. I find no errors in the planning, review, or execution of this Combat Logistics Patrol (CLP). (Enclosure X diagram; Background Para 1.a. Mission timeline)

c. Every TCN vehicle in the Convoy has a placard that identifies it as part of the formation. Once a vehicles placard has been pulled it will not reenter the convoy. The Convoy Commander notifies the following of the vehicles removal: convoy, MCT, and 714th TC Battle Desk. Gun trucks are staggered (METT-T) through out the convoy to provide optimum support. The Convoy commander is generally the 3rd vehicle in the order of march, and the Assistant Convoy Commander provides roving support. All vehicles in the convoy keep constant communication with one another to maintain situational awareness. (Enclosure X diagram)

d. (b)(6) placard had been pulled and he was instructed to return to HBG prior to the EOF incident due to his erratic driving in and around the convoy. (Enclosure IX Pg. 33-34 SPC (b)(3)(b)(6) statement)

e. I find (b)(6) attempt to reenter the convoy despite multiple warnings was clearly hostile, and he intended to harm SPC (b)(3)(b)(6) vehicle. Not knowing that the approaching vehicle had previously been apart of the convoy SPC (b)(3)(b)(6) did everything in his purview to prevent the loss of life. (Enclosure IX Pg.25 Q9)

f. I find SPC (b)(3)(b)(6) executed the EOF procedures correctly and gave the deceased ample warning to stop his vehicle. (Enclosure X Diagram)

g. I find that there were no deficiencies in the equipment, ROE, or unit TTP's. (Enclosure VII 3.D.1; X diagram)

h. All personnel were properly briefed on the Escalation of Force procedures and MNC-I ROE prior to departing on the Combat Logistics Patrol (CLP) during the mission brief. (Enclosure III Q4; VII 3.D.1)

i. The CLP medic was notified immediately and arrived on site approximately 5 minutes after notification to render medical support but the driver was KIA due to the severity of his wounds. (Enclosure IX Pg. 30-31 SPC Perez's statement)

j. I find this incident couldn't have been prevented due to (b)(6) hostile actions towards the convoy. SPC (b)(3)(b)(6) properly followed the Escalation of Force procedures and MNC-I ROE, given the distance and speed of the approaching vehicle. (Enclosure VII 3.D.1; X diagram)

k. I find the Truck Commander's (SGT (b)(3)(b)(6)) order for the Gunner (SPC (b)(3)(b)(6)) to employ deadly force was appropriate to ensure the defense of the CLP. No disciplinary actions are warranted. (Enclosure IX Pg.21 Q8, Q9)

l. There was no casualty report available, because the individual died on the scene. The Battalion utilized the sworn statements, and SIR to report the incident. (Enclosure VI SIR)

3. Recommendations.

I recommend no further action in this matter.

4. POC is the undersigned at (b)(2)High VOIP.

(b)(3)(b)(6)

CPT, MS
Investigating Officer

ENCLOSURE I

SWORN STATEMENT

For use of this form, see AR 190-45; the proponent agency is ODCSOPS

PRIVACY ACT STATEMENT

AUTHORITY: Title 10 USC Section 301; Title 5 USC Section 2951; E.O. 9397 dated November 22, 1943 *(SSN)*.
PRINCIPAL PURPOSE: To provide commanders and law enforcement officials with means by which information may be accurately
ROUTINE USES: Your social security number is used as an additional/alternate means of identification to facilitate filing and retrieval.
DISCLOSURE: Disclosure of your social security number is voluntary.

1. LOCATION	2. DATE (YYYYMMDD)	3. TIME	4. FILE NUMBER
L-53/QWBC	20070511	1600	

5. LAST NAME, FIRST NAME, MIDDLE NAME		7. GRADE/STATUS
(b)(3)(b)(6)	(b)(3)(b)(6)	Spc/ANG

8. ORGANIZATION OR ADDRESS
714th mp

9.
I, (b)(3)(b)(6), WANT TO MAKE THE FOLLOWING STATEMENT UNDER OATH:

Q: Where were you the night of this event? (Truck #, position, ~~Direction~~ Direction)
A: I was in trk 9, DS driver facing away from trk 10 once we (b)(3)(b)(6) heard of EOF we turned n went to the Rear to pull Security.

Q: What was your convoy speed & interval?
A: Speed was 45 mph at 100-150 meter, but were stopped for a PIED n were spaced 50-100 meter.

Q: How much sleep had you gotten prior to event?
A: 10-12 hrs of Sleep

Q: When was your last EOF Training?
A: that night at clip Briff.

Q: Where you aware of the oncoming threat?
A: No, tc had comms n were facing away from threat

Q: How long were you on the Road?
A: 3-4 hrs

Q: Are you on any medication that may have affected your memories of this event?
A: No

Q: Do you have anymore information that may be pertinent to this investigation?
A: No

10. EXHIBIT	11. INITIALS OF PERSON MAKING STATEMENT	PAGE 1 OF 3 PAGES
I	(b)(3)(b)(6)	

ADDITIONAL PAGES MUST CONTAIN THE HEADING "STATEMENT ____ AT ____ DATED ____

THE BOTTOM OF EACH ADDITIONAL PAGE MUST BEAR THE INITIALS OF THE PERSON MAKING THE STATEMENT, AND PAGE NUMBER MUST BE BE INDICATED.

USE THIS PAGE IF NEEDED. IF THIS PAGE IS NOT NEEDED, PLEASE PROCEED TO FINAL PAGE OF THIS FORM.

STATEMENT OF (b)(3)(b)(6) TAKEN AT L-53 DATED 11 May 07

9. STATEMENT *(Continued)*

Nothing Follows

INITIALING STATEMENT (b)(3)(b)(6)

STATEMENT OF (b)(3)(b)(6) TAKEN AT L-53 DATED 11 May 07

9. STATEMENT *(Continued)*

Nothing Follows

AFFIDAVIT

(b)(3)(b)(6) _____, HAVE READ OR HAVE HAD READ TO ME THIS STATEMENT WHICH BEGINS ON PAGE 1, AND ENDS ON PAGE 3. I FULLY UNDERSTAND THE CONTENTS OF THE ENTIRE STATEMENT MADE BY ME. THE STATEMENT IS TRUE. I HAVE INITIALED ALL CORRECTIONS AND HAVE INITIALED THE BOTTOM OF EACH PAGE CONTAINING THE STATEMENT. I HAVE MADE THIS STATEMENT FREELY WITHOUT HOPE OF BENEFIT OR REWARD, WITHOUT THREAT OF PUNISHMENT, AND WITHOUT COERCION, UNLAWFUL INFLUENCE, OR UNLAWFUL INDUCEMENT.

(b)(3)(b)(6)

(Signature of Person Making Statement)

WITNESSES:

ORGANIZATION OR ADDRESS

ORGANIZATION OR ADDRESS

Subscribed and sworn to before me, a person authorized by law to administer oaths, this 11 day of MAY, 2007 at 1600 Bldg L-53, BWBC

(b)(3)(b)(6)

Administering Oath)

CPT, MS

n Administering Oath)

(Authority To Administer Oaths)

(b)(3)(b)(6) RSON MAKING STATEMENT

PAGE 3 OF 3 PAGES

PAGE 3, DA FORM 2823, DEC 1998

USAPA V1.00

008578

RIGHTS WARNING PROCEDURE/WAIVER CERTIFICATE

For use of this form, see AR 190-30; the proponent agency is ODCSOPS

DATA REQUIRED BY THE PRIVACY ACT

AUTHORITY: Title 10, United States Code, Section 3012(g)
PRINCIPAL PURPOSE: To provide commanders and law enforcement officials with means by which information may be accurately identified.
ROUTINE USES: Your Social Security Number is used as an additional/alternate means of identification to facilitate filing and retrieval.
DISCLOSURE: Disclosure of your Social Security Number is voluntary.

1. LOCATION	2. DATE	3. TIME	4. FILE NO.
L-53 QWBC	11 May 07	1600	

5. NAME (Last, First, MI)	8. ORGANIZATION OR ADDRESS
(b)(3)(b)(6)	714th MC
7. GRADE/STATUS: Spc/AWG	

PART I - RIGHTS WAIVER/NON-WAIVER CERTIFICATE

Section A. Rights

The investigator whose name appears below told me that he/she is with the United States Army _____ and wanted to question me about the following offense(s) of which I am suspected/accused: _____

Before he/she asked me any questions about the offense(s), however, he/she made it clear to me that I have the following rights:

1. I do not have to answer any question or say anything.
2. Anything I say or do can be used as evidence against me in a criminal trial.
3. *(For personnel subject to the UCMJ)* I have the right to talk privately to a lawyer before, during, and after questioning and to have a lawyer present with me during questioning. This lawyer can be a civilian lawyer I arrange for at no expense to the Government or a military lawyer detailed for me at no expense to me, or both.

   - or -

   (For civilians not subject to the UCMJ) I have the right to talk privately to a lawyer before, during, and after questioning and to have a lawyer present with me during questioning. I understand that this lawyer can be one that I arrange for at my own expense, or if I cannot afford a lawyer and want one, a lawyer will be appointed for me before any questioning begins.
4. If I am now willing to discuss the offense(s) under investigation, with or without a lawyer present, I have a right to stop answering questions at any time, or speak privately with a lawyer before answering further, even if I sign the waiver below.

5. COMMENTS *(Continue on reverse side)*

Section B. Waiver

I understand my rights as stated above. I am now willing to discuss the offense(s) under investigation and make a statement without talking to a lawyer first and without having a lawyer present with me.

WITNESSES *(If available)*

1a. NAME *(Type or Print)*	(b)(3)(b)(6)
b. ORGANIZATION OR ADDRESS AND PHONE	
2a. NAME *(Type or Print)*	
b. ORGANIZATION OR ADDRESS AND PHONE	6. ORGANIZATION OF INVESTIGATOR

Section C. Non-waiver

1. I do not want to give up my rights
   - ☐ I want a lawyer
   - ☐ I do not want to be questioned or say anything
2. SIGNATURE OF INTERVIEWEE

ATTACH THIS WAIVER CERTIFICATE TO ANY SWORN STATEMENT *(DA FORM 2823)* SUBSEQUENTLY EXECUTED BY THE SUSPECT/ACCUSED

PART II - RIGHTS WARNING PROCEDURE

THE WARNING

1. WARNING - Inform the suspect/accused of:
   a. Your official position.
   b. Nature of offense(s).
   c. The fact that he/she is a suspect/accused.
2. RIGHTS - Advise the suspect/accused of his/her rights as follows:
   "Before I ask you any questions, you must understand your rights."
   a. "You do not have to answer my questions or say anything."
   b. "Anything you say or do can be used as evidence against you in a criminal trial."
   c. (For personnel subject to the UCMJ) "You have the right to talk privately to a lawyer before, during, and after questioning and to have a lawyer present with you during questioning. This lawyer can be a civilian you arrange for at no expense to the Government or a military lawyer detailed for you at no expense to you, or both."

   - or -

   (For civilians not subject to the UCMJ) You have the right to talk privately to a lawyer before, during, and after questioning and to have a lawyer present with you during questioning. This lawyer can be one you arrange for at your own expense, or if you cannot afford a lawyer and want one, a lawyer will be appointed for you before any questioning begins."
   d. "If you are now willing to discuss the offense(s) under investigation, with or without a lawyer present, you have a right to stop answering questions at any time, or speak privately with a lawyer before answering further, even if you sign a waiver certificate."

Make certain the suspect/accused fully understands his/her rights.

THE WAIVER

"Do you understand your rights?"
(If the suspect/accused says "no," determine what is not understood, and if necessary repeat the appropriate rights advisement. If the suspect/accused says "yes," ask the following question.)

"Have you ever requested a lawyer after being read your rights?"
(If the suspect/accused says "yes," find out when and where. If the request was recent *(i.e., fewer than 30 days ago)*, obtain legal advice whether to continue the interrogation. If the suspect/accused says "no," or if the prior request was not recent, ask him/her the following question.)

"Do you want a lawyer at this time?"
(If the suspect/accused says "yes," stop the questioning until he/she has a lawyer. If the suspect/accused says "no," ask him/her the following question.)

"At this time, are you willing to discuss the offense(s) under investigation and make a statement without talking to a lawyer and without having a lawyer present with you?" *(If the suspect/accused says "no," stop the interview and have him/her read and sign the non-waiver section of the waiver certificate on the other side of this form. If the suspect/accused says "yes," have him/her read and sign the waiver section of the waiver certificate on the other side of this form.)*

SPECIAL INSTRUCTIONS

WHEN SUSPECT/ACCUSED REFUSES TO SIGN WAIVER CERTIFICATE: If the suspect/accused orally waives his/her rights but refuses to sign the waiver certificate, you may proceed with the questioning. Make notations on the waiver certificate to the effect that he/she has stated that he/she understands his/her rights, does not want a lawyer, wants to discuss the offense(s) under investigation, and refuses to sign the waiver certificate.

IF WAIVER CERTIFICATE CANNOT BE COMPLETED IMMEDIATELY: in all cases the waiver certificate must be completed as soon as possible. Every effort should be made to complete the waiver certificate before any questioning begins. If the waiver certificate cannot be completed at once, as in the case of street interrogation, completion may be temporarily postponed. Notes should be kept on the circumstances.

PRIOR INCRIMINATING STATEMENTS:

1. If the supsect/accused has made spontaneous incriminating statements before being properly advised of his/her rights he/she should be told that such statements do not obligate him/her to answer further questions.
2. If the suspect/accused was questioned as such either without being advised of his/her rights or some question exists as to the propriety of the first statement, the accused must be so advised. The office of the serving Staff Judge Advocate should be contacted for assistance in drafting the proper rights advisal.

NOTE: If 1 or 2 applies, the fact that the suspect/accused was advised accordingly should be noted in the comment section on the waiver certificate and initialed by the suspect/accused.

WHEN SUSPECT/ACCUSED DISPLAYS INDECISION ON EXERCISING HIS OR HER RIGHTS DURING THE INTERROGATION PROCESS: If during the interrogation, the suspect displays indecision about requesting counsel (for example, "Maybe I should get a lawyer."), further questioning must cease immediately. At that point, you may question the suspect/accused only concerning whether he or she desires to waive counsel. The questioning may not be utilized to discourage a suspect/accused from exercising his/her rights. (For example, do not make such comments as "If you didn't do anything wrong, you shouldn't need an attorney.")

COMMENTS *(Continued)*

SWORN STATEMENT

For use of this form, see AR 190-45; the proponent agency is ODCSOPS

PRIVACY ACT STATEMENT

AUTHORITY: Title 10 USC Section 301; Title 5 USC Section 2951; E.O. 9397 dated November 22, 1943 *(SSN)*.
PRINCIPAL PURPOSE: To provide commanders and law enforcement officials with means by which information may be accurately
ROUTINE USES: Your social security number is used as an additional/alternate means of identification to facilitate filing and retrieval.
DISCLOSURE: Disclosure of your social security number is voluntary.

1. LOCATION	2. DATE *(YYYYMMDD)*	3. TIME	4. FILE NUMBER
L-53 Q WBC	2007 05 11	1741	

5. LAST NAME, FIRST NAME, MIDDLE NAME	6. SSN	7. GRADE/STATUS
(b)(3)(b)(6)	(b)(3)(b)(6)	E-4

8. ORGANIZATION OR ADDRESS
714th MC

9.
I (b)(3)(b)(6), WANT TO MAKE THE FOLLOWING STATEMENT UNDER OATH:

Q: What was your position in the convoy on the night in question? (Truck #, Location)

A: I was in Rad 10 in the rear of the convoy pulling rear security, Stopped because of possiable IED in front of convoy.

Q: (b)(3)(b)(6) Were you aware of the on coming threat; DID you have eyes on the vehicle?

A: Yes, I was watching in The side view mirror, My flashed his lights repeatedly, Then used his laser, No response. Fired three tracers from his M16, Changed The M2, Fired at fire area with permission of the TC. Shot at The grill, Last at The Cab when it wouldn't stop.

Q: When (b)(3)(b)(6) was your last EOF Brief?

A: That night before the mission, In each convoy brief we go over The ROE,

Q: How long were you on the road prior to the EOF incident?

A: 2 To 3 hours.

Q: Do you have anymore information that may be pertinant to this investigation?

A: NO

Nothing Follows

(b)(3)(b)(6)

(b)(3)(b)(6)

10. EXHIBIT	11. (b)(3)(b)(6) F PERSON MAKING STATEMENT	PAGE 1 OF 3 PAGES
II		

ADDITIONAL PAGES MUST CONTAIN THE HEADING "STATEMENT _____ TAKEN AT _____ DATED _____

THE BOTTOM OF EACH ADDITIONAL PAGE MUST BEAR THE INITIALS OF THE PERSON MAKING THE STATEMENT, AND PAGE NUMBER MUST BE BE INDICATED.

RIGHTS WARNING PROCEDURE/WAIVER CERTIFICATE

For use of this form, see AR 190-30; the proponent agency is ODCSOPS

DATA REQUIRED BY THE PRIVACY ACT

AUTHORITY: Title 10, United States Code, Section 3012(g)
PRINCIPAL PURPOSE: To provide commanders and law enforcement officials with means by which information may be accurately identified.
ROUTINE USES: Your Social Security Number is used as an additional/alternate means of identification to facilitate filing and retrieval.
DISCLOSURE: Disclosure of your Social Security Number is voluntary.

1. LOCATION	2. DATE	3. TIME	4. FILE NO.
Q-West	11 May 07	1721	

5. NAME (b)(3)(b)(6)

6. SSN (b)(3)(b)(6)

7. GRADE/STATUS E-4

8. ORGANIZATION OR ADDRESS 714th MC

PART I - RIGHTS WAIVER/NON-WAIVER CERTIFICATE

Section A. Rights

The investigator whose name appears below told me that he/she is with the United States Army 45th Sustainment Brigade and wanted to question me about the following offense(s) of which I am suspected/accused: events a 09 May 07

Before he/she asked me any questions about the offense(s), however, he/she made it clear to me that I have the following rights:

1. I do not have to answer any question or say anything.
2. Anything I say or do can be used as evidence against me in a criminal trial.
3. *(For personnel subject to the UCMJ)* I have the right to talk privately to a lawyer before, during, and after questioning and to have a lawyer present with me during questioning. This lawyer can be a civilian lawyer I arrange for at no expense to the Government or a military lawyer detailed for me at no expense to me, or both.

   - or -

   (For civilians not subject to the UCMJ) I have the right to talk privately to a lawyer before, during, and after questioning and to have a lawyer present with me during questioning. I understand that this lawyer can be one that I arrange for at my own expense, or if I cannot afford a lawyer and want one, a lawyer will be appointed for me before any questioning begins.
4. If I am now willing to discuss the offense(s) under investigation, with or without a lawyer present, I have a right to stop answering questions at any time, or speak privately with a lawyer before answering further, even if I sign the waiver below.

5. COMMENTS *(Continue on reverse side)*

Section B. Waiver

I understand my rights as stated above. I am now willing to discuss the offense(s) under investigation and make a statement without talking to a lawyer first and without having a lawyer present with me.

WITNESSES *(If available)*	3. SIGNATURE OF INTERVIEWEE
1a. NAME *(Type or Print)*	(b)(3)(b)(6)
b. ORGANIZATION OR ADDRESS AND PHONE	4.
2a. NAME *(Type or Print)*	5. CPT, MS
b. ORGANIZATION OR ADDRESS AND PHONE	6. ORGANIZATION OF INVESTIGATOR

Section C. Non-waiver

1. I do not want to give up my rights
   - ☐ I want a lawyer
   - ☐ I do not want to be questioned or say anything
2. SIGNATURE OF INTERVIEWEE

ATTACH THIS WAIVER CERTIFICATE TO ANY SWORN STATEMENT *(DA FORM 2823)* SUBSEQUENTLY EXECUTED BY THE SUSPECT/ACCUSED

DA FORM 3881, NOV 1989 EDITION OF NOV 84 IS OBSOLETE APD PE v2.01ES

008582

PART II - RIGHTS WARNING PROCEDURE

THE WARNING

1. WARNING - Inform the suspect/accused of:
   a. Your official position.
   b. Nature of offense(s).
   c. The fact that he/she is a suspect/accused.
2. RIGHTS - Advise the suspect/accused of his/her rights as follows:
   "Before I ask you any questions, you must understand your rights."
   a. "You do not have to answer my questions or say anything."
   b. "Anything you say or do can be used as evidence against you in a criminal trial."
   c. (For personnel subject to the UCMJ) "You have the right to talk privately to a lawyer before, during, and after questioning and to have a lawyer present with you during questioning. This lawyer can be a civilian you arrange for at no expense to the Government or a military lawyer detailed for you at no expense to you, or both."

   - or -

   (For civilians not subject to the UCMJ) You have the right to talk privately to a lawyer before, during, and after questioning and to have a lawyer present with you during questioning. This lawyer can be one you arrange for at your own expense, or if you cannot afford a lawyer and want one, a lawyer will be appointed for you before any questioning begins."
   d. "If you are now willing to discuss the offense(s) under investigation, with or without a lawyer present, you have a right to stop answering questions at any time, or speak privately with a lawyer before answering further, even if you sign a waiver certificate."

Make certain the suspect/accused fully understands his/her rights.

THE WAIVER

"Do you understand your rights?"
(If the suspect/accused says "no," determine what is not understood, and if necessary repeat the appropriate rights advisement. If the suspect/accused says "yes," ask the following question.)

"Have you ever requested a lawyer after being read your rights?"
(If the suspect/accused says "yes," find out when and where. If the request was recent *(i.e., fewer than 30 days ago)*, obtain legal advice whether to continue the interrogation. If the suspect/accused says "no," or if the prior request was not recent, ask him/her the following question.)

"Do you want a lawyer at this time?"
(If the suspect/accused says "yes," stop the questioning until he/she has a lawyer. If the suspect/accused says "no," ask him/her the following question.)

"At this time, are you willing to discuss the offense(s) under investigation and make a statement without talking to a lawyer and without having a lawyer present with you?" *(If the suspect/accused says "no," stop the interview and have him/her read and sign the non-waiver section of the waiver certificate on the other side of this form. If the suspect/accused says "yes," have him/her read and sign the waiver section of the waiver certificate on the other side of this form.)*

SPECIAL INSTRUCTIONS

WHEN SUSPECT/ACCUSED REFUSES TO SIGN WAIVER CERTIFICATE: If the suspect/accused orally waives his/her rights but refuses to sign the waiver certificate, you may proceed with the questioning. Make notations on the waiver certificate to the effect that he/she has stated that he/she understands his/her rights, does not want a lawyer, wants to discuss the offense(s) under investigation, and refuses to sign the waiver certificate.

IF WAIVER CERTIFICATE CANNOT BE COMPLETED IMMEDIATELY: In all cases the waiver certificate must be completed as soon as possible. Every effort should be made to complete the waiver certificate before any questioning begins. If the waiver certificate cannot be completed at once, as in the case of street interrogation, completion may be temporarily postponed. Notes should be kept on the circumstances.

PRIOR INCRIMINATING STATEMENTS:

1. If the suspect/accused has made spontaneous incriminating statements before being properly advised of his/her rights he/she should be told that such statements do not obligate him/her to answer further questions.
2. If the suspect/accused was questioned as such either without being advised of his/her rights or some question exists as to the propriety of the first statement, the accused must be so advised. The office of the serving Staff Judge Advocate should be contacted for assistance in drafting the proper rights advisal.

NOTE: If 1 or 2 applies, the fact that the suspect/accused was advised accordingly should be noted in the comment section on the waiver certificate and initialed by the suspect/accused.

WHEN SUSPECT/ACCUSED DISPLAYS INDECISION ON EXERCISING HIS OR HER RIGHTS DURING THE INTERROGATION PROCESS: If during the interrogation, the suspect displays indecision about requesting counsel (for example, "Maybe I should get a lawyer."), further questioning must cease immediately. At that point, you may question the suspect/accused only concerning whether he or she desires to waive counsel. The questioning may not be utilized to discourage a suspect/accused from exercising his/her rights. (For example, do not make such comments as "If you didn't do anything wrong, you shouldn't need an attorney.")

COMMENTS *(Continued)*

EOF SIR #271

SWORN STATEMENT

For use of this form, see AR 190-45; the proponent agency is PMG.

PRIVACY ACT STATEMENT

AUTHORITY:	Title 10 USC Section 301; Title 5 USC Section 2951; E.O. 9397 dated November 22, 1943 (SSN).
PRINCIPAL PURPOSE:	To provide commanders and law enforcement officials with means by which information may be accurately identified.
ROUTINE USES:	Your social security number is used as an additional/alternate means of identification to facilitate filing and retrieval.
DISCLOSURE:	Disclosure of your social security number is voluntary.

1. LOCATION	2. DATE (YYYYMMDD)	3. TIME	4. FILE NUMBER
Q-West	2007 05 09	06:12	

5. LAST NAME, FIRST NAME, MIDDLE NAME	6. SSN	7. GRADE/STATUS
(b)(3)(b)(6)	(b)(3)(b)(6)	E4

8. ORGANIZATION OR ADDRESS
714th MC

9. I, (b)(3)(b)(6), WANT TO MAKE THE FOLLOWING STATEMENT UNDER OATH:

What was the incident? (IED, PIED, SAF,.....) _____ Was your vehicle involved? YES / NO

If the incident was an IED, approximately how far was the IED from the vehicle involved? _____

If the incident was an IED, where was the IED located? (Right, Left,.....) _____

If the incident was an IED, if seen, what type of IED was it? (155mm, 122mm,.....) _____

If the incident was an IED, where was the blast focused? (Outward, Upward,....) _____

What vehicle were you in the CLP, to include GTs? (1,2,3,.....) 83

Approximately what speed was the CLP traveling at the time of the incident? Stopped

What position in the vehicle were you in? (Driver, TC, Gunner): Driver

What was the bumper number (TC 101, GT-04,...) and type (M1114, M1088, 5 Ton,...) _____

Where did the incident happen? (Grid, NB/SB, ASR/MSR, landmarks,.....) (b)(2)High

Were there any injuries? 1 KIA

What are the damages to equipment, vehicle and/or cargo? _____

Who was contacted? 524th When? 23:10

Describe in your own words what happened before and after the incident. The convoy was stopped to get better visual on a PID. As rear security I parked on top of a hill so my gunner would have about 300 meter line of sight. The best available at that site. (b)(2)High My TC was SGT (b)(3)(b)(6). My gunner was SPC (b)(3)(b)(6) In my side mirror I saw headlights appear. My gunner flashed them with with his 2 million candlepower light and they stopped right away with hazard lights on. Seconds later another

10. EXHIBIT	11. INITIALS OF PERSON MAKING STATEMENT	PAGE 1 OF 3 PAGES
	(b)(3)(b)(6)	

ADDITIONAL PAGES MUST CONTAIN THE HEADING "STATEMENT _____ TAKEN AT _____ DATED _____

THE BOTTOM OF EACH ADDITIONAL PAGE MUST BEAR THE INITIALS OF THE PERSON MAKING THE STATEMENT, AND PAGE NUMBER MUST BE BE INDICATED.

USE THIS PAGE IF NEEDED. IF THIS PAGE IS NOT NEEDED, PLEASE PROCEED TO FINAL PAGE OF THIS FORM.

STATEMENT OF (b)(3)(b)(6) TAKEN AT 06:37 DATED 2007 05 09

9. STATEMENT (Continued)

pair of headlights appeared. My gunner still had the light in his hand and started flashing right away. No effect. After repeated flashing he picked his rifel and used his lazer. I saw the light pointed at the lights. I could see the grill in the side mirror when he fired three tracer from his rifel to the side of the truck. Saying "Oh Shit" he put down the M16, and charged the M2. Starting to the side, then the grill, then to kill in bursts. After the last burst the encomeing truck barely missed us it went into the ditch. My TC told me to move forward away from the now stopped truck. Then my TC finished calling up the report to the CC. Nothings Clearnes.

(b)(3)(b)(6)

INITIALS OF PERSON MAKING STATEMENT (b)(3)(b)(6)

STATEMENT OF (b)(3)(b)(6) TAKEN AT 0637 DATED 2001 05 09

STATEMENT *(Continued)*

(b)(3)(b)(6)

AFFIDAVIT

I, (b)(3)(b)(6), HAVE READ OR HAVE HAD READ TO ME THIS STATEMENT WHICH BEGINS ON PAGE 1, AND ENDS ON PAGE 3. I FULLY UNDERSTAND THE CONTENTS OF THE ENTIRE STATEMENT MADE BY ME. THE STATEMENT IS TRUE. I HAVE INITIALED ALL CORRECTIONS AND HAVE INITIALED THE BOTTOM OF EACH PAGE CONTAINING THE STATEMENT. I HAVE MADE THIS STATEMENT FREELY WITHOUT HOPE OF BENEFIT OR REWARD, WITHOUT THREAT OF PUNISHMENT, AND WITHOUT COERCION, UNLAWFUL INFLUENCE, OR UNLAWFUL INDUCEMENT.

(b)(3)(b)(6)

(Signature of Person Making Statement)

WITNESSES:

(b)(3)(b)(6)

ORGANIZATION OR ADDRESS

(b)(3)(b)(6)

ORGANIZATION OR ADDRESS

Subscribed and sworn to before me, a person authorized by law to administer oaths, this _____ day of _____, _____ at _____

(Signature of Person Administering Oath)

(Typed Name of Person Administering Oath)

(Authority To Administer Oaths)

INITIALS OF PERSON MAKING STATEMENT (b)(3)(b)(6)

SIR 271

SWORN STATEMENT

For use of this form, see AR 190-45; the proponent agency is PMG.

PRIVACY ACT STATEMENT

AUTHORITY: Title 10, USC Section 301; Title 5, USC Section 2951; E.O. 9397 Social Security Number (SSN).

PRINCIPAL PURPOSE: To document potential criminal activity involving the U.S. Army, and to allow Army officials to maintain discipline, law and order through investigation of complaints and incidents.

ROUTINE USES: Information provided may be further disclosed to federal, state, local, and foreign government law enforcement offices, prosecutors, courts, child protective services, victims, witnesses, the Department of Veterans Affairs, and the Office of Personnel Management. Information provided may be used for determinations regarding judicial or non-judicial punishment, other administrative disciplinary actions, security clearances, recruitment, retention, placement, and other personnel actions.

DISCLOSURE: Disclosure of your SSN and other information is voluntary.

1. LOCATION	2. DATE (YYYYMMDD)	3. TIME	4. FILE NUMBER
Q-West	2007 05 09	0726	

5. LAST NAME, FIRST NAME, MIDDLE NAME	6. SSN	7. GRADE/STATUS
(b)(3)(b)(6)	(b)(3)(b)(6)	E4

8. ORGANIZATION OR ADDRESS
71HTh MC

9.

I, _____, WANT TO MAKE THE FOLLOWING STATEMENT UNDER OATH:

These Questions and Answers are in relation to events that occurred on 08 2340D May 07 during Tornado 12 CLP IIRC to QBC along (b)(2)High

(b)(3)(b)(6)

Question #1: When did you realize this TCN vehicle went astray?

answer: After the tag # was checked and we were told that this was a truck kicked out before check point 5 (b)(3)(b)(6)

(b)(3)(b)(6)

Question #2: What are procedures for vehicle going astray before CKPT5?

answer: The plackard # and bumper # of trucks that were kicked out or no-showed is sent to higher. After CKPT5 nothing comes with in blast range of the rear of the convoy. NO Trucks allowed in (b)(3)(b)(6)

(b)(3)(b)(6)

Question #3: Why didn't you attempt to get vehicle back into CLP?

answer: After CKPT5 we don't know who they are, where they've been, who or what they picked up or dropped off. It would be a major security violation to let a truck that was not in our custody the whole trip enter any FOB. All gunners shine their lights in the windows of trucks passed on the side of the road to make sure it not one of the trucks brought with us from CKPT5. (b)(3)(b)(6)

(b)(3)(b)(6)

Question #4: Where do you normally stop to reconsolidate? What place along the HBG route?

(b)(3)(b)(6)

answer: North side of CKPT5. (b)(3)(b)(6)

10. EXHIBIT	11. INITIALS OF PERSON MAKING STATEMENT	PAGE 1 OF 3 PAGES
	(b)(3)(b)(6)	

ADDITIONAL PAGES MUST CONTAIN THE HEADING "STATEMENT OF _____ TAKEN AT _____ DATED _____"

THE BOTTOM OF EACH ADDITIONAL PAGE MUST BEAR THE INITIALS OF THE PERSON MAKING THE STATEMENT, AND PAGE NUMBER MUST BE INDICATED.

USE THIS PAGE IF NEEDED. IF THIS PAGE IS NOT NEEDED, PLEASE PROCEED TO FINAL PAGE OF THIS FORM.

STATEMENT OF (b)(3)(b)(6) TAKEN AT 0801 DATED 2007 05 09

9. STATEMENT (b)(3)(b)(6)

Question #5: How long were you in CKPT 5 to refuel before proceed ing south?
answer: 5 To 15 min [redacted] for the last gun truck after it comes to a stop (b)(3)(b)(6)

(b)(3)(b)(6)

Question #6: Did TCN vehicle ever attempt to get back in CLP prior to CKPT5? (b)(3)(b)(6)
answer: NO (b)(3)(b)(6)

Question #7: What checkpoint did TCN'S placard get pulled ??
answer: South of CKPT 3

(b)(3)(b)(6)

Question #8: How far was vehicle from your vehicle when you fired round at driver?
answer: I was our driver, I did not shoot. In side vein mirror it's cab almost filled The whole Thing. (b)(3)(b)(6)

(b)(3)(b)(6)

Question #9: Describe in detail EOF procedures leading up to the vehicle approaching?
answer: Seconds before TCN'S lights appeared gunner had flashed another vehicle to a stop near the far end of our feild of vein. Started this new set of headlights. Repeatedly. My gunner picked up his M16 to shine his lazer at the headlights. I saw in my mirror 3 5,56 Tracers go to the side of the now visable Truck. Gunner charged M2. Saw tracers go to passenger tire area. Saw tracers go to grill next burst, last burst went to cab. (b)(3)(b)(6)

(b)(3)(b)(6)

Question #10: Do you have anything further to add to your statement at this time.
answer: NO

INITIALS OF PERSON MAKING STATEMENT (b)(3)(b)(6)

PAGE 2 OF 3 PAGES

DA FORM 2823, NOV 2006

APD PE v1.1

008588

STATEMENT OF (b)(3)(b)(6) TAKEN AT 0824 DATED 2007 05 09

9. STATEMENT (Continued) Nothing Follows

(b)(3)(b)(6)

AFFIDAVIT

I (b)(3)(b)(6), HAVE READ OR HAVE HAD READ TO ME THIS STATEMENT WHICH BEGINS ON PAGE 1, AND ENDS ON PAGE ____ I FULLY UNDERSTAND THE CONTENTS OF THE ENTIRE STATEMENT MADE BY ME. THE STATEMENT IS TRUE. I HAVE INITIALED ALL CORRECTIONS AND HAVE INITIALED THE BOTTOM OF EACH PAGE CONTAINING THE STATEMENT. I HAVE MADE THIS STATEMENT FREELY WITHOUT HOPE OF BENEFIT OR REWARD, WITHOUT THREAT OF PUNISHMENT, AND WITHOUT COERCION, UNLAWFUL INFLUENCE, OR UNLAWFUL INDUCEMENT.

(b)(3)(b)(6)
Statement)

WITNESSES

Captain (b)(3)(b)(6)
52nd CSB

ORGANIZATION OR ADDRESS

Subscribed and sworn to before me, a person authorized by law to administer oaths, this ____ day of ____, ____ at ____

(b)(3)(b)(6)
(Signature of Person Administering Oath)

(Typed Name of Person Administering Oath)

ORGANIZATION OR ADDRESS

(Authority To Administer Oaths)

INITIALS OF PERSON MAKING STATEMENT (b)(3)(b)(6)

PAGE 3 OF 3 PAGES

DA FORM 2823, NOV 2006

APD PE v1.00

008589

ENCLOSURE III

SWORN STATEMENT

For use of this form, see AR 190-45; the proponent agency is ODCSOPS

PRIVACY ACT STATEMENT

AUTHORITY: Title 10 USC Section 301; Title 5 USC Section 2951; E.O. 9397 dated November 22, 1943 *(SSN)*.
PRINCIPAL PURPOSE: To provide commanders and law enforcement officials with means by which information may be accurately
ROUTINE USES: Your social security number is used as an additional/alternate means of identification to facilitate filing and retrieval.
DISCLOSURE: Disclosure of your social security number is voluntary.

1. LOCATION	2. DATE *(YYYYMMDD)*	3. TIME	4. FILE NUMBER
FOB Q WEST	2007 0501	1635	

5. LAST NAME, FIRST NAME, MIDDLE NAME	6. SSN	7. GRADE/STATUS
(b)(3)(b)(6)	(b)(3)(b)(6)	SSG

8. ORGANIZATION OR ADDRESS
714 MC

9.

I, _____, WANT TO MAKE THE FOLLOWING STATEMENT UNDER OATH:

Q: What happened the night of 8 MAY 2007

A: I SSG (b)(3)(b)(6) was convoy commander for 1st platoon 714 MC on mission of TCN escort from HBG to Q WEST. Between HBG and Check point 5 any trucks with issues preventing timely and safe movement of convoy is pulled from convoy. This particular truck passed rapidly my vehicle, was completely off of the shoulder of the road. We had the vehicle stopped by one of the gun trucks in front of my vehicle. Upon arriving on scene my gunner, SPC (b)(3)(b)(6) was the first one to talk to driver. When I got out of truck he, SPC (b)(3)(b)(6) informed me that the driver of truck had motioned to his side arm and then used his hand to simulate a weapon, pointed it at his head and simulated shooting himself. At that time I felt that it was safer to have him leave convoy, we pulled his paperwork and informed him to return to Zohko.

Q: ~~Who~~ Was the gesture to your gunner or to harm himself?

A: The gesture was made to show harm to himself (b)(3)(b)(6)

Q: What were you doing @ the time of the incident?

A: Convoy was stopped for PIED, I was cordinating for EOD to inspect object in front of convoy. I was approximatly 1mile in front of the incident.

10. EXHIBIT	11. INITIALS	ING STATEMENT	PAGE 1 OF 3 PAGES
III	(b)(3)(b)(6)		

ADDITIONAL PAGES MUST CONTAIN THE HEADING "STATEMENT ____ *T* ____ *DATED* ____

THE BOTTOM OF EACH ADDITIONAL PAGE MUST BEAR THE INITIALS OF THE PERSON MAKING THE STATEMENT, AND PAGE NUMBER MUST BE BE INDICATED.

DA FORM 2823, DEC 1998 DA FORM 2823, JUL 72, IS OBSOLETE USAPA V1.00
008591

USE THIS PAGE IF NEEDED. IF THIS PAGE IS NOT NEEDED, PLEASE PROCEED TO FINAL PAGE OF THIS FORM.

STATEMENT OF (b)(3)(b)(6) TAKEN AT FOB Q WEST DATED 11 MAY 2007

9. STATEMENT *(Continued)*

Q: When was EOF Training?
A: EOF training was conducted prior to start of mission.

Q: Does SPC (b)(3)(b)(6) have a (b)(3)(b)(6) history of negligent discharges?
A: No SPC (b)(3)(b)(6) to my knowledge has not had any neglegent discharges.

Q: CAN you Draw a diagram of your location on the night in question related to Gun truck # 10

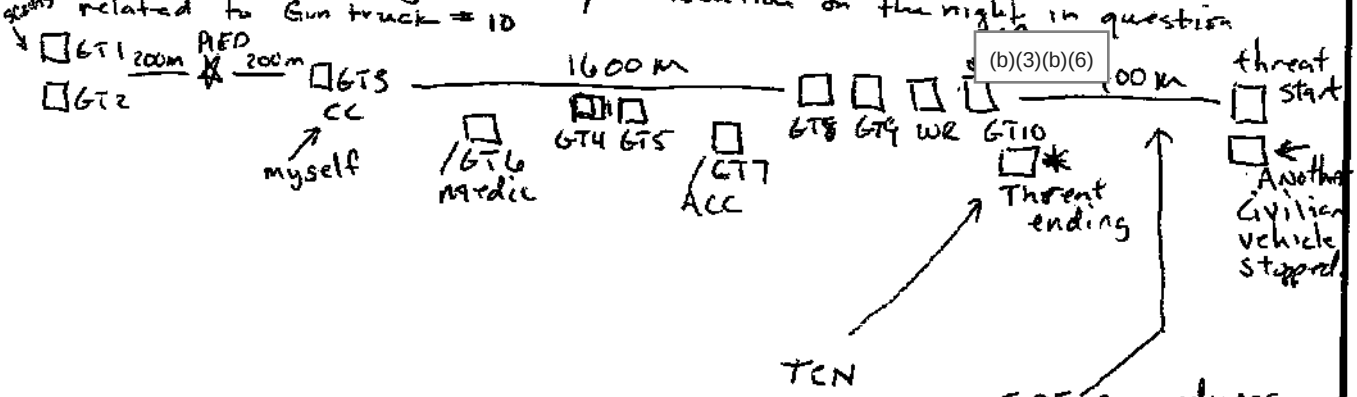

EOF procedures conducted
1 Shine light
2 Shine lazer
3 Small caliber in dead space
4 Crew serve dead space
5 Shoot to eliminate the threat

Q: Do you have any information that may pertain to this investigation?
A: Not at this time.

(b)(3)(b)(6)

NOTHING FOLLOWS

(b)(3)(b)(6)

INITIALS OF PERSON MAKING STA (b)(3)(b)(6)

USAPA V1.00

STATEMENT OF (b)(3)(b)(6) TAKEN AT FOB QWEST DATED 11 MAY 2007

9. STATEMENT *(Continued)*

(b)(3)(b)(6)

AFFIDAVIT

I, (b)(3)(b)(6), HAVE READ OR HAVE HAD READ TO ME THIS STATEMENT WHICH BEGINS ON PAGE 1, AND ENDS ON PAGE 3. I FULLY UNDERSTAND THE CONTENTS OF THE ENTIRE STATEMENT MADE BY ME. THE STATEMENT IS TRUE. I HAVE INITIALED ALL CORRECTIONS AND HAVE INITIALED THE BOTTOM OF EACH PAGE CONTAINING THE STATEMENT. I HAVE MADE THIS STATEMENT FREELY (b)(3)(b)(6) R REWARD, WITHOUT THREAT OF PUNISHMENT, AND WITHOUT COERCION, UNLAWFUL INFLUE ENT.

(b)(3)(b)(6)

aking Statement)

WITNESSES:

Subs a person authorized by law to administer oaths, this 11 day of MAY, 2007 at QWEST

(b)(3)(b)(6)

ORGANIZATION OR ADDRESS

inistering Oath)

(b)(3)(b)(6), CPT MS

(Typed Name of Person Administering Oath)

ORGANIZATION OR ADDRESS

(Authority To Administer Oaths)

INITIALS OF PERSON MAKING STATE (b)(3)(b)(6)

PAGE 3 OF 3 PAGES

RIGHTS WARNING PROCEDURE/WAIVER CERTIFICATE

For use of this form, see AR 190-30; the proponent agency is ODCSOPS

DATA REQUIRED BY THE PRIVACY ACT

AUTHORITY: Title 10, United States Code, Section 3012(g)
PRINCIPAL PURPOSE: To provide commanders and law enforcement officials with means by which information may be accurately identified.
ROUTINE USES: Your Social Security Number is used as an additional/alternate means of identification to facilitate filing and retrieval.
DISCLOSURE: Disclosure of your Social Security Number is voluntary.

1. LOCATION	2. DATE	3. TIME	4. FILE NO.
FOB Q WEST IRAQ 09351	11 MAY 07	1635	

5.	8. ORGANIZATION OR ADDRESS
(b)(3)(b)(6)	714 MC
6. (b)(3)(b)(6) — 7. GRADE/STATUS: SSG	

PART I - RIGHTS WAIVER/NON-WAIVER CERTIFICATE

Section A. Rights

The Investigator whose name appears below told me that he/she is with the United States Army 45th Sustainment Brigade and wanted to question me about the following offense(s) of which I am suspected/accused: EOF EVENTS OF 9 MAY 07

Before he/she asked me any questions about the offense(s), however, he/she made it clear to me that I have the following rights:

1. I do not have to answer any question or say anything.
2. Anything I say or do can be used as evidence against me in a criminal trial.
3. *(For personnel subject to the UCMJ)* I have the right to talk privately to a lawyer before, during, and after questioning and to have a lawyer present with me during questioning. This lawyer can be a civilian lawyer I arrange for at no expense to the Government or a military lawyer detailed for me at no expense to me, or both.

   - or -

   (For civilians not subject to the UCMJ) I have the right to talk privately to a lawyer before, during, and after questioning and to have a lawyer present with me during questioning. I understand that this lawyer can be one that I arrange for at my own expense, or if I cannot afford a lawyer and want one, a lawyer will be appointed for me before any questioning begins.
4. If I am now willing to discuss the offense(s) under investigation, with or without a lawyer present, I have a right to stop answering questions at any time, or speak privately with a lawyer before answering further, even if I sign the waiver below.

5. COMMENTS *(Continue on reverse side)*

Section B. Waiver

I understand my rights as stated above. I am now willing to discuss the offense(s) under investigation and make a statement without talking to a lawyer first and without having a lawyer present with me.

WITNESSES *(If available)*	3. (b)(3)(b)(6)
1a. NAME *(Type or Print)*	
b. ORGANIZATION OR ADDRESS AND PHONE	4.
2a. NAME *(Type or Print)*	5.
b. ORGANIZATION OR ADDRESS AND PHONE	6. ORGANIZATION OF INVESTIGATOR

Section C. Non-waiver

1. I do not want to give up my rights
   - ☐ I want a lawyer
   - ☐ I do not want to be questioned or say anything
2. SIGNATURE OF INTERVIEWEE

ATTACH THIS WAIVER CERTIFICATE TO ANY SWORN STATEMENT *(DA FORM 2823)* SUBSEQUENTLY EXECUTED BY THE SUSPECT/ACCUSED

PART II - RIGHTS WARNING PROCEDURE

THE WARNING

1. WARNING - Inform the suspect/accused of:
   a. Your official position.
   b. Nature of offense(s).
   c. The fact that he/she is a suspect/accused.
2. RIGHTS - Advise the suspect/accused of his/her rights as follows:
   "Before I ask you any questions, you must understand your rights."
   a. "You do not have to answer my questions or say anything."
   b. "Anything you say or do can be used as evidence against you in a criminal trial."
   c. (For personnel subject to the UCMJ) "You have the right to talk privately to a lawyer before, during, and after questioning and to have a lawyer present with you during questioning. This lawyer can be a civilian you arrange for at no expense to the Government or a military lawyer detailed for you at no expense to you, or both."

   - or -

   (For civilians not subject to the UCMJ) You have the right to talk privately to a lawyer before, during, and after questioning and to have a lawyer present with you during questioning. This lawyer can be one you arrange for at your own expense, or if you cannot afford a lawyer and want one, a lawyer will be appointed for you before any questioning begins."
   d. "If you are now willing to discuss the offense(s) under investigation, with or without a lawyer present, you have a right to stop answering questions at any time, or speak privately with a lawyer before answering further, even if you sign a waiver certificate."

Make certain the suspect/accused fully understands his/her rights.

THE WAIVER

"Do you understand your rights?"
(If the suspect/accused says "no," determine what is not understood, and if necessary repeat the appropriate rights advisement. If the suspect/accused says "yes," ask the following question.)

"Have you ever requested a lawyer after being read your rights?"
(If the suspect/accused says "yes," find out when and where. If the request was recent *(i.e., fewer than 30 days ago)*, obtain legal advice whether to continue the interrogation. If the suspect/accused says "no," or if the prior request was not recent, ask him/her the following question.)

"Do you want a lawyer at this time?"
(If the suspect/accused says "yes," stop the questioning until he/she has a lawyer. If the suspect/accused says "no," ask him/her the following question.)

"At this time, are you willing to discuss the offense(s) under investigation and make a statement without talking to a lawyer and without having a lawyer present with you?" *(If the suspect/accused says "no," stop the interview and have him/her read and sign the non-waiver section of the waiver certificate on the other side of this form. If the suspect/accused says "yes," have him/her read and sign the waiver section of the waiver certificate on the other side of this form.)*

SPECIAL INSTRUCTIONS

WHEN SUSPECT/ACCUSED REFUSES TO SIGN WAIVER CERTIFICATE: If the suspect/accused orally waives his/her rights but refuses to sign the waiver certificate, you may proceed with the questioning. Make notations on the waiver certificate to the effect that he/she has stated that he/she understands his/her rights, does not want a lawyer, wants to discuss the offense(s) under investigation, and refuses to sign the waiver certificate.

IF WAIVER CERTIFICATE CANNOT BE COMPLETED IMMEDIATELY: In all cases the waiver certificate must be completed as soon as possible. Every effort should be made to complete the waiver certificate before any questioning begins. If the waiver certificate cannot be completed at once, as in the case of street interrogation, completion may be temporarily postponed. Notes should be kept on the circumstances.

PRIOR INCRIMINATING STATEMENTS:

1. If the supsect/accused has made spontaneous incriminating statements before being properly advised of his/her rights he/she should be told that such statements do not obligate him/her to answer further questions.
2. If the suspect/accused was questioned as such either without being advised of his/her rights or some question exists as to the propriety of the first statement, the accused must be so advised. The office of the serving Staff Judge Advocate should be contacted for assistance in drafting the proper rights advisal.

NOTE: If 1 or 2 applies, the fact that the suspect/accused was advised accordingly should be noted in the comment section on the waiver certificate and initialed by the suspect/accused.

WHEN SUSPECT/ACCUSED DISPLAYS INDECISION ON EXERCISING HIS OR HER RIGHTS DURING THE INTERROGATION PROCESS: If during the interrogation, the suspect displays indecision about requesting counsel (for example, "Maybe I should get a lawyer."), further questioning must cease immediately. At that point, you may question the suspect/accused only concerning whether he or she desires to waive counsel. The questioning may not be utilized to discourage a suspect/accused from exercising his/her rights. (For example, do not make such comments as "If you didn't do anything wrong, you shouldn't need an attorney.")

COMMENTS *(Continued)*

SIR #77

SWORN STATEMENT

For use of this form, see AR 190-45; the proponent agency is PMG.

PRIVACY ACT STATEMENT

THORITY: Title 10 USC Section 301; Title 5 USC Section 2951; E.O. 9397 dated November 22, 1943 (SSN).
PRINCIPAL To provide commanders and law enforcement officials with means by which information may be accurately identified.
ROUTINE USES: Your social security number is used as an additional/alternate means of identification to facilitate filing and retrieval.
DISCLOSURE: Disclosure of your social security number is voluntary.

1. LOCATION	2. DATE (YYYYMMDD)	3. TIME	4. FILE NUMBER
	20071 0509		

5. LAST NAME, FIRST NAME, MIDDLE NAME	6. SSN	7. GRADE/STATUS
(b)(3)(b)(6)	(b)(3)(b)(6)	SSG

8. ORGANIZATION OR ADDRESS
7/4 MC

9. I, (b)(3)(b)(6), WANT TO MAKE THE FOLLOWING STATEMENT UNDER OATH:

What was the incident? (IED, PIED, SAF,.....) EOF Was your vehicle involved? YES / NO

If the incident was an IED, approximately how far was the IED from the vehicle involved? _____

If the incident was an IED, where was the IED located? (Right, Left,.....) _____

If the incident was an IED, if seen, what type of IED was it? (155mm, 122mm,.....) _____

If the incident was an IED, where was the blast focused? (Outward, Upward,....) _____

What vehicle were you in the CLP, to include GTs? (1,2,3,.....) 3

Approximately what speed was the CLP traveling at the time of the incident? Stopped

What position in the vehicle were you in? (Driver, TC, Gunner): TC

What was the bumper number (TC 101, GT-04,...) and type (M1114, M1088, 5 Ton,...) T-12 M1114

Where did the incident happen? (Grid, NB/SB, ASR/MSR, landmarks,.....) (b)(2)High

Were there any injuries? YES 1 TCN KIA

What are the damages to equipment, vehicle and/or cargo? CAB OF TCN VEHICLE CAUGHT FIRE AND WAS DESTROYED

Who was contacted? BN/ Battle Space When? 2315 LOCAL

Describe in your own words what happened before and after the incident. CONVOY STOPPED TO INVESTIGATE SUSPICIOUS OBJECT. AS WE CAME TO A HALT RED 10 called and reported EOF. VEHICLE RAPIDLY APROACHED GUNNER SAID HE STARTED EOF WAS AT 400 METERS ENDED AT 40 METERS. ENDED IN LETHAL FORCE. (b)(3)(b)(6) NORDEN

10. EXHIBIT	11. INIT (b)(3)(b)(6)	MAKING STATEMENT	PAGE 1 OF _____ PAGES

ADDITIONAL PAGES MUST CONTAIN THE HEADING "STATEMENT OF _____ TAKEN AT _____ DATED _____

THE BOTTOM OF EACH ADDITIONAL PAGE MUST BEAR THE INITIALS OF THE PERSON MAKING THE STATEMENT, AND PAGE NUMBER MUST BE BE INDICATED.

USE THIS PAGE IF NEEDED. IF THIS PAGE IS NOT NEEDED, PLEASE PROCEED TO FINAL PAGE OF THIS FORM.

STATEMENT OF (b)(3)(b)(6) TAKEN AT FOB Q WEST DATED 20070509

9. STATEMENT (Continued)

WENT THROUGH STERS FLASH WITH LIGHT, LASER, SHOOT DEAD SPACE. BY THAT TIME HE WAS STILL MOVING TOWARDS CONVOY, ATTEMPTED TO DISABLE, THEN SHOT TO ELIMINATE THE THREAT. WE THEN SENT MEDIC BACK TO INVESTIGATE. MEDIC PRONOUNCED TCN DEAD. WE THEN REQUESTED RECOVERY FOR VEHICLE AND BODY. WHEN RECOVERY ARRIVED THEY SECURED SCENE, AND WE LEFT TO CM. NOTHING ELSE FOLLOWS

(b)(3)(b)(6)

INITIALS OF PERSON MAKING ST (b)(3)(b)(6)

SIR 271

SWORN STATEMENT

For use of this form, see AR 190-45; the proponent agency is ODCSOPS

PRIVACY ACT STATEMENT

THORITY:	Title 10 USC Section 301; Title 5 USC Section 2951; E.O. 9397 dated November 22, 1943 (SSN).
PRINCIPAL	To provide commanders and law enforcement officials with means by which information may be accurately identified.
ROUTINE USES:	Your social security number is used as an additional/alternate means of identification to facilitate filing and retrieval.
DISCLOSURE:	Disclosure of your social security number is voluntary.

1. LOCATION	2. DATE (YYYYMMDD)	3. TIME	4. FILE NUMBER
FOB Q WEST	20070504	0722	

5. LAST NAME, FIRST NAME, MIDDLE NAME	6. SSN	7. GRADE/STATUS
(b)(3)(b)(6)	(b)(3)(b)(6)	SSG/EL

8. ORGANIZATION OR ADDRESS
714 MC

9.

I, _____, WANT TO MAKE THE FOLLOWING STATEMENT UNDER OATH:

These Questions and answers are in relation to events that occurred on 08 2340D Mar 07 during Tornado 12 CLP HBQ to QBC along (b)(2)High

(b)(3)(b)(6)

Question 1 When did you realize this TCN vehicle went Astray?
Answer: Just south of CP 3 on (b)(2)High TCN vehicle passed my vehicle. My convoys lead vehicle stopped the TCN, we pulled his placard and continued mission. Just north of CP 6 on (b)(2)High convoy stopped for PIED. As convoy halted TCN approached rapidly from rear. Rear truck conducted EOF After vehicle was stopped and tag number verified did we realize it was one of ours that was trying to come back into convoy. (b)(3)(b)(6)

(b)(3)(b)(6)

Question 2: What are procedures for vehicles going astray before CKPT5?
Answer: If a vehicle breaks down prior to CKPT5, or leaves convoy prior to CKPT5 their placards are pulled and they're told to return to Zohk (b)(3)(b)(6)

Question 3: Why didn't you attempt to get vehicle back into CLP?
Answer: Vehicle passed other trucks unsafely and was seen as a hazard to others in convoy. (b)(3)(b)(6)

10. EXHIBIT	11. INITIALS OF (b)(3)(b)(6) STATEMENT	PAGE 1 OF 3 PAGES

ADDITIONAL PAGES MUST CONTAIN THE HEADING "STATEMENT _____ DATED _____

THE BOTTOM OF EACH ADDITIONAL PAGE MUST BEAR THE INITIALS OF THE PERSON MAKING THE STATEMENT, AND PAGE NUMBER MUST BE BE INDICATED.

USE THIS PAGE IF NEEDED. IF THIS PAGE IS NOT NEEDED, PLEASE PROCEED TO FINAL PAGE OF THIS FORM.

TATEMENT OF (b)(3)(b)(6) TAKEN AT FOB Q WEST DATED 9 MAY 2007

9. STATEMENT (Continued) (b)(3)(b)(6)

Question 4: Where do you normally stop to reconsolidate? what places along the HBG route?
Answer: The only set location for reconsilidation is CKPT5. If some thing happens to split convoy, we set a rally point and wait for all vehicles to arrive. (b)(3)(b)(6)

(b)(3)(b)(6)

Question 5: How long were you in CKPT 5 to refuel before proceeding South?
Answer: 14 minutes (b)(3)(b)(6)

(b)(3)(b)(6)

Question 6: Did TCN Vehicle ever attempt to get back in CRP before CKPT5?
Answer: NOT TO MY KNOWLEDGE (b)(3)(b)(6)

(b)(3)(b)(6)

Question 7: What check point did TCN's placard get pulled?
Answer: Just South of CP3 on MSR TAMPA. (b)(3)(b)(6)

(b)(3)(b)(6)

Question 8: Do you have anything further to add to your sworn statement at this time?
ANSWER: NO THERE IS NOTHING FURTHER I WOULD LIKE TO ADD. (b)(3)(b)(6)

NOTHING FOLLOWS.

(b)(3)(b)(6)

INITIAL

USAPA V1.00

STATEMENT OF (b)(3)(b)(6) TAKEN AT FOB Q WEST DATED 9 MAY 2007

STATEMENT *(Continued)*

(b)(3)(b)(6)

AFFIDAVIT

I, (b)(3)(b)(6), HAVE READ OR HAVE HAD READ TO ME THIS STATEMENT WHICH BEGINS ON PAGE 1, AND ENDS ON PAGE 3. I FULLY UNDERSTAND THE CONTENTS OF THE ENTIRE STATEMENT MADE BY ME. THE STATEMENT IS TRUE. I HAVE INITIALED ALL CORRECTIONS AND HAVE INITIALED THE BOTTOM OF EACH PAGE CONTAINING THE STATEMENT. I HAVE MADE THIS STATEMENT FREELY WITHOUT HOPE OF BENEFIT OR REWARD, WITHOUT THREAT OF PUNISHMENT, AND WITHOUT COERCION, UNLAWFUL INFLUENCE, OR UNLAWFUL INTERFERENCE.

(b)(3)(b)(6)

(Signature of Person Making Statement)

WITNESSES:

Captain (b)(3)(b)(6)
524th CSSB

ORGANIZATION OR ADDRESS

ORGANIZATION OR ADDRESS

Subscribed and sworn to before me, a person authorized by law to administer oaths, this _____ day of _____, _____ at _____

(b)(3)(b)(6)

(Typed Name of Person Administering Oath)

(b)(3)(b)(6)

(Authority To Administer Oaths)

INITIALS OF PERSON MAKING STATEMENT (b)(3)(b)(6)

ENCLOSURE IV

SWORN STATEMENT

For use of this form, see AR 190-45; the proponent agency is ODCSOPS

PRIVACY ACT STATEMENT

AUTHORITY: Title 10 USC Section 301; Title 5 USC Section 2951; E.O. 9397 dated November 22, 1943 *(SSN)*.
PRINCIPAL PURPOSE: To provide commanders and law enforcement officials with means by which information may be accurately
ROUTINE USES: Your social security number is used as an additional/alternate means of identification to facilitate filing and retrieval.
DISCLOSURE: Disclosure of your social security number is voluntary.

1. LOCATION	2. DATE *(YYYYMMDD)*	3. TIME	4. FILE NUMBER
FOB Q-West	20070509	1815	

(b)(3)(b)(6)	6. SSN (b)(3)(b)(6)	7. GRADE/STATUS E-5/SGT.

8. ORGANIZATION OR ADDRESS
714th MP

9.
I, SGT (b)(3)(b)(6), WANT TO MAKE THE FOLLOWING STATEMENT UNDER OATH:

Q: TELL ME what happened on the night of 9 MAY 2007 (b)(3)(b)(6)

A: The convoy came to a halt because of a Possible IED in the front, SPC (b)(3)(b)(6) SPC (b)(3)(b)(6), and myself were in T-110 Pulling rear security for our convoy. SPC (b)(3)(b)(6) My gunner told me that a vehicle was approaching from the rear about 300 meters out, My gunner flashed his spot light at the vehicle and it stopped. Shortly after my gunner reported another vehicle approaching from the rear and he said it Passed the other one that was stopped. My gunner had been flashing the vehicle numerous times and it made no attempt to stop. I told my gunner to start his EOF and he went to his laser, My gunner shined his laser in the windshield, but the truck kept rolling. The vehicle was about 100 meters away and I ordered my gunner to fire his M-16 into the deadspace, so he fired 3 rounds to the left. The vehicle was close so I told my gunner to fire at the engine block and then eliminate the threat. He fired his 50 cal. into the cab and the truck rolled to a stop going into the ditch.

Q: Did SPC (b)(3)(b)(6) have a history of Negligent Discharges?

A: No

Q: Is SPC (b)(3)(b)(6) on any medications that may have affected his judgement?

A: No, not to my knowledge

Q: Do you feel his vision (illumination/position) affected his judgment in any way

A: No, clear line of site

10. EXHIBIT	11. INITIALS OF PERSON MAKING STATEMENT	PAGE 1 OF 3 PAGES
IV	(b)(3)(b)(6)	

ADDITIONAL PAGES MUST CONTAIN THE HEADING "STATEMENT _____ TAKEN AT _____ DATED _____

THE BOTTOM OF EACH ADDITIONAL PAGE MUST BEAR THE INITIALS OF THE PERSON MAKING THE STATEMENT, AND PAGE NUMBER MUST BE BE INDICATED.

RIGHTS WARNING PROCEDURE/WAIVER CERTIFICATE

For use of this form, see AR 190-30; the proponent agency is ODCSOPS

DATA REQUIRED BY THE PRIVACY ACT

AUTHORITY: Title 10, United States Code, Section 3012(g)
PRINCIPAL PURPOSE: To provide commanders and law enforcement officials with means by which information may be accurately identified.
ROUTINE USES: Your Social Security Number is used as an additional/alternate means of identification to facilitate filing and retrieval.
DISCLOSURE: Disclosure of your Social Security Number is voluntary.

1. LOCATION	2. DATE	3. TIME	4. FILE NO.
FOB Q-West	11 May 07	1815	

(b)(3)(b)(6)		8. ORGANIZATION OR ADDRESS 714th Maint. Co.
6. SSN (b)(3)(b)(6)	7. GRADE/STATUS E-5/SGT.	

PART I - RIGHTS WAIVER/NON-WAIVER CERTIFICATE

Section A. Rights

The investigator whose name appears below told me that he/she is with the United States Army 45th Sustainment Brigade EOF events of 09 May 07 and wanted to question me about the following offense(s) of which I am suspected/accused: _____

Before he/she asked me any questions about the offense(s), however, he/she made it clear to me that I have the following rights:

1. I do not have to answer any question or say anything.
2. Anything I say or do can be used as evidence against me in a criminal trial.
3. *(For personnel subject to the UCMJ)* I have the right to talk privately to a lawyer before, during, and after questioning and to have a lawyer present with me during questioning. This lawyer can be a civilian lawyer I arrange for at no expense to the Government or a military lawyer detailed for me at no expense to me, or both.

   - or -

   (For civilians not subject to the UCMJ) I have the right to talk privately to a lawyer before, during, and after questioning and to have a lawyer present with me during questioning. I understand that this lawyer can be one that I arrange for at my own expense, or if I cannot afford a lawyer and want one, a lawyer will be appointed for me before any questioning begins.
4. If I am now willing to discuss the offense(s) under investigation, with or without a lawyer present, I have a right to stop answering questions at any time, or speak privately with a lawyer before answering further, even if I sign the waiver below.

5. COMMENTS *(Continue on reverse side)*

Section B. Waiver

I understand my rights as stated above. I am now willing to discuss the offense(s) under investigation and make a statement without talking to a lawyer first and without having a lawyer present with me.

WITNESSES *(If available)*	
1a. NAME *(Type or Print)*	(b)(3)(b)(6)
b. ORGANIZATION OR ADDRESS AND PHONE	(b)(3)(b)(6) R
2a. NAME *(Type or Print)*	5. TYPED NAME OF INVESTIGATOR (b)(3)(b)(6) CPT, MS
b. ORGANIZATION OR ADDRESS AND PHONE	6. ORGANIZATION OF INVESTIGATOR 45th SUSTAINMENT BRIGADE

Section C. Non-waiver

1. I do not want to give up my rights
   ☐ I want a lawyer ☐ I do not want to be questioned or say anything
2. SIGNATURE OF INTERVIEWEE

ATTACH THIS WAIVER CERTIFICATE TO ANY SWORN STATEMENT *(DA FORM 2823)* SUBSEQUENTLY EXECUTED BY THE SUSPECT/ACCUSED

PART II - RIGHTS WARNING PROCEDURE

THE WARNING

1. WARNING - Inform the suspect/accused of:
   a. Your official position.
   b. Nature of offense(s).
   c. The fact that he/she is a suspect/accused.
2. RIGHTS - Advise the suspect/accused of his/her rights as follows:
   "Before I ask you any questions, you must understand your rights."
   a. "You do not have to answer my questions or say anything."
   b. "Anything you say or do can be used as evidence against you in a criminal trial."
   c. (For personnel subject to the UCMJ) "You have the right to talk privately to a lawyer before, during, and after questioning and to have a lawyer present with you during questioning. This lawyer can be a civilian you arrange for at no expense to the Government or a military lawyer detailed for you at no expense to you, or both."

   - or -

   (For civilians not subject to the UCMJ) You have the right to talk privately to a lawyer before, during, and after questioning and to have a lawyer present with you during questioning. This lawyer can be one you arrange for at your own expense, or if you cannot afford a lawyer and want one, a lawyer will be appointed for you before any questioning begins."
   d. "If you are now willing to discuss the offense(s) under investigation, with or without a lawyer present, you have a right to stop answering questions at any time, or speak privately with a lawyer before answering further, even if you sign a waiver certificate."

Make certain the suspect/accused fully understands his/her rights.

THE WAIVER

"Do you understand your rights?"
(If the suspect/accused says "no," determine what is not understood, and if necessary repeat the appropriate rights advisement. If the suspect/accused says "yes," ask the following question.)

"Have you ever requested a lawyer after being read your rights?"
(If the suspect/accused says "yes," find out when and where. If the request was recent *(i.e., fewer than 30 days ago)*, obtain legal advice whether to continue the interrogation. If the suspect/accused says "no," or if the prior request was not recent, ask him/her the following question.)

"Do you want a lawyer at this time?"
(If the suspect/accused says "yes," stop the questioning until he/she has a lawyer. If the suspect/accused says "no," ask him/her the following question.)

"At this time, are you willing to discuss the offense(s) under investigation and make a statement without talking to a lawyer and without having a lawyer present with you?" *(If the suspect/accused says "no," stop the interview and have him/her read and sign the non-waiver section of the waiver certificate on the other side of this form. If the suspect/accused says "yes," have him/her read and sign the waiver section of the waiver certificate on the other side of this form.)*

SPECIAL INSTRUCTIONS

WHEN SUSPECT/ACCUSED REFUSES TO SIGN WAIVER CERTIFICATE: If the suspect/accused orally waives his/her rights but refuses to sign the waiver certificate, you may proceed with the questioning. Make notations on the waiver certificate to the effect that he/she has stated that he/she understands his/her rights, does not want a lawyer, wants to discuss the offense(s) under investigation, and refuses to sign the waiver certificate.

IF WAIVER CERTIFICATE CANNOT BE COMPLETED IMMEDIATELY: In all cases the waiver certificate must be completed as soon as possible. Every effort should be made to complete the waiver certificate before any questioning begins. If the waiver certificate cannot be completed at once, as in the case of street interrogation, completion may be temporarily postponed. Notes should be kept on the circumstances.

PRIOR INCRIMINATING STATEMENTS:

1. If the supsect/accused has made spontaneous incriminating statements before being properly advised of his/her rights he/she should be told that such statements do not obligate him/her to answer further questions.
2. If the suspect/accused was questioned as such either without being advised of his/her rights or some question exists as to the propriety of the first statement, the accused must be so advised. The office of the serving Staff Judge Advocate should be contacted for assistance in drafting the proper rights advisal.

NOTE: If 1 or 2 applies, the fact that the suspect/accused was advised accordingly should be noted in the comment section on the waiver certificate and initialed by the suspect/accused.

WHEN SUSPECT/ACCUSED DISPLAYS INDECISION ON EXERCISING HIS OR HER RIGHTS DURING THE INTERROGATION PROCESS: If during the interrogation, the suspect displays indecision about requesting counsel (for example, "Maybe I should get a lawyer."), further questioning must cease immediately. At that point, you may question the suspect/accused only concerning whether he or she desires to waive counsel. The questioning may not be utilized to discourage a suspect/accused from exercising his/her rights. (For example, do not make such comments as "If you didn't do anything wrong, you shouldn't need an attorney.")

COMMENTS *(Continued)*

EOF SIR# 271

SWORN STATEMENT

For use of this form; see AR 190-45; the proponent agency is PMG.

PRIVACY ACT STATEMENT

AUTHORITY:	Title 10 USC Section 301; Title 5 USC Section 2951; E.O. 9397 dated November 22, 1943 *(SSN)*.
PRINCIPAL	To provide commanders and law enforcement officials with means by which information may be accurately identified.
ROUTINE USES:	Your social security number is used as an additional/alternate means of identification to facilitate filing and retrieval.
DISCLOSURE:	Disclosure of your social security number is voluntary.

1. LOCATION	2. DATE (YYYYMMDD)	3. TIME	4. FILE NUMBER
Q-west	20070508	0610	

5. LAST NAME, FIRST NAME, MIDDLE NAME	6. SSN	7. GRADE/STATUS
(b)(3)(b)(6)	(b)(3)(b)(6)	E-5/SGT

8. ORGANIZATION OR ADDRESS
719 II/TC

9. I, SGT (b)(3)(b)(6), WANT TO MAKE THE FOLLOWING STATEMENT UNDER OATH:

What was the incident? (IED, PIED, SAF,.....) EOF Was your vehicle involved? YES / NO

If the incident was an IED, approximately how far was the IED from the vehicle involved? _____

If the incident was an IED, where was the IED located? (Right, Left,.....) _____

If the incident was an IED, if seen, what type of IED was it? (155mm, 122mm,.....) _____

If the incident was an IED, where was the blast focused? (Outward, Upward,....) _____

What vehicle were you in the CLP, to include GTs? (1,2,3,.....) 83

Approximately what speed was the CLP traveling at the time of the incident? halted

What position in the vehicle were you in? (Driver, TC, Gunner): TC

What was the bumper number (TC 101, GT-04,...) and type (M1114, M1088, 5 Ton,...) T-110, M-1083

Where did the incident happen? (Grid, NB/SB, ASR/MSR, landmarks,..... (b)(2)High Route

Were there any injuries? One DOA

What are the damages to equipment, vehicle and/or cargo? Truck caught on fire

Who was contacted? 524 CSSB When? Soon after

Describe in your own words what happened before and after the incident. On 08 May 07 I was the TC for T-110, (b)(3)(b)(6) a 1083 and was the rear element in a Clip heading South from Habu-Gate to Q-west. A call came over the radio that we would be halted for a PIED up front. My truck had come to a stop and shortly after, my gunner SPC (b)(3)(b)(6) notified me that a vehicle was approaching from the rear. I told him to keep eyes on the vehicle and to remember his EOF.

10. EXHIBIT	11. INITIALS OF PERSON MAKING STATEMENT	PAGE 1 OF 3 PAGES
	(b)(3)(b)(6)	

ADDITIONAL PAGES MUST CONTAIN THE HEADING "STATEMENT _____ TAKEN AT _____ DATED _____

THE BOTTOM OF EACH ADDITIONAL PAGE MUST BEAR THE INITIALS OF THE PERSON MAKING THE STATEMENT, AND PAGE NUMBER MUST BE BE INDICATED.

DA FORM 2823, DEC 1998 DA FORM 2823, JUL 72, IS OBSOLETE USAPA V1.01

008605

USE THIS PAGE IF NEEDED. IF THIS PAGE IS NOT NEEDED, PLEASE PROCEED TO FINAL PAGE OF THIS FORM.

STATEMENT OF SGT (b)(3)(b)(6) TAKEN AT FOB Q-West DATED 09 May 07

9. STATEMENT (Continued)

The vehicle was about 300meters when my gunner started his EOF. SPC (b)(3)(b)(6) had already shined his spot light several times at the vehicle. The vehicle had not slowed down and ignored all warnings from SPC (b)(3)(b)(6). SPC worder continued his EOF by pointing his laser at the vehicle. SPC (b)(3)(b)(6) had realized the vehicle was moving toward us to fast and skipped the flare. The vehicle was about 100meters away when SPC (b)(3)(b)(6) fired 3 warning shots to the left of the vehicle with his M-16. SPC (b)(3)(b)(6) informed me that the vehicle was still approaching our convoy. The vehicle was about 80meters away when I ordered SPC (b)(3)(b)(6) to eliminate the threat in fear of it being an ambush. I thought that because of the PIED in the front of the convoy. SPC (b)(3)(b)(6) fired his 50 cal into the cab of the vehicle and eliminated the threat against our convoy.

I called up to the CC, SSG (b)(3)(b)(6) and he called up to BN(S24/SSG) T-10. The ace came back to my location in the back of the convoy and I gave (b)(3)(b)(6) SGT (b)(3)(b)(6), SPC (b)(3)(b)(6) and SPC (b)(3)(b)(6) (medic) assests the situation (b)(3)(b)(6). The truck was on fire and the driver was hanging out the driver window (b)(3)(b)(6). Our convoy held securing on the truck & the body till recovery arrived - end of statement

(b)(3)(b)(6)

INITIALS OF PERSON MAKING STATEMENT (b)(3)(b)(6)

STATEMENT OF SGT (b)(3)(b)(6) TAKEN AT FOB Q-West DATED 09 May 07

9. STATEMENT *(Continued)*

(b)(3)(b)(6)

AFFIDAVIT

I, SGT (b)(3)(b)(6) _____, HAVE READ OR HAVE HAD READ TO ME THIS STATEMENT WHICH BEG[illegible] PAGE_____. I FULLY UNDERSTAND THE CONTENTS OF THE ENTIRE STATEMENT MADE BY ME. THE STATEMENT IS TRUE. I HAVE INITIALED ALL CORRECTIONS AND HAVE INITIALED THE BOTTOM OF EACH PAGE CONTAINING THE STATEMENT. I HAVE MADE THIS STATEMENT FREELY WITHOUT HOPE OF BENEFIT OR REWARD, WITHOUT THREAT OF PUNISHMENT, AND WITHOUT COERCION, UNLAWFUL IN[illegible]MENT.

(b)(3)(b)(6)

(Signature of Person Making Statement)

WITNESSES:

(b)(3)(b)(6)

ORGANIZATION OR ADDRESS

(b)(3)(b)(6)

ORGANIZATION OR ADDRESS

Subscribed and sworn to before me, a person authorized by law to administer oaths, this _____ day of _____, _____ at _____

(Signature of Person Administering Oath)

(Typed Name of Person Administering Oath)

(Authority To Administer Oaths)

INITIALS OF PERSON MAKING S[illegible] (b)(3)(b)(6)

PAGE 3 OF 3 PAGES

PAGE 3, DA FORM 2823, DEC 19[illegible]

USAPA V1.01

SIR 271

SWORN STATEMENT

For use of this form, see AR 190-45; the proponent agency is ODCSOPS

PRIVACY ACT STATEMENT

UTHORITY:	Title 10 USC Section 301; Title 5 USC Section 2951; E.O. 9397 dated November 22, 1943 (SSN).
PRINCIPAL	To provide commanders and law enforcement officials with means by which information may be accurately identified.
ROUTINE USES:	Your social security number is used as an additional/alternate means of identification to facilitate filing and retrieval.
DISCLOSURE:	Disclosure of your social security number is voluntary.

1. LOCATION	2. DATE (YYYYMMDD)	3. TIME	4. FILE NUMBER
FOB Q-West	20070509	0724	

	6. SSN	7. GRADE/STATUS
(b)(3)(b)(6)	(b)(3)(b)(6)	E-5/SGT

8. ORGANIZATION OR ADDRESS
714 MC

9.
I, SGT (b)(3)(b)(6), WANT TO MAKE THE FOLLOWING STATEMENT UNDER OATH:

These Questions and answers are in relation to events that occurred on 08 2340D May 07 during Tornado 12 CLP HBG to QBC along (b)(3)(b)(6)

(b)(3)(b)(6)

Question #2: When did you realize this TCN vehicle went astray?

Answer: I was notified by the ACC SGT (b)(3)(b)(6) after the incident. (b)(3)(b)(6)

(b)(3)(b)(6)

Question #3: What are Procedures for vehicle's going astray before CKPT 5?

Answer: If a TCN cannot finish the mission for whatever reason, we Pull his window number and notify the EC (b)(3)(b)(6)

(b)(3)(b)(6)

Question #4: Did you attempt to get vehicle back into CLP?

Answer: It was to late, we already went through EOF before we knew he was with us (b)(3)(b)(6)

(b)(3)(b)(6)

Question #5: Where do you normally stop to consolidate? What Places along the HBG Route? (b)(3)(b)(6)

Answer: CKPT (b)(3)(b)(6)

(b)(3)(b)(6)

Question #6: How long were you at CKPT 5 to refuel before Proceeding south?

Answer: 5 to 10 minutes (b)(3)(b)(6)

(b)(3)(b)(6)

Question #7: Did TCN vehicle ever attempt to get back in CLP Prior to CKPT 5?

Answer: NOT to my knowledge (b)(3)(b)(6)

(b)(3)(b)(6)

Question #8: What CKPT did TCN's Placard get Pulled?

Answer: South of CKPT 3 (b)(3)(b)(6)

(b)(3)(b)(6)

Question #9: How far was vehicle from your vehicle when you fired round at driver?

Answer: about 30 meter (b)(3)(b)(6)

10. EXHIBIT	11. INITIALS OF PERSON MAKING STATEMENT	PAGE 1 OF 3 PAGES
	(b)(3)(b)(6)	

ADDITIONAL PAGES MUST CONTAIN THE HEADING "STATEMENT _____ TAKEN AT _____ DATED _____"

THE BOTTOM OF EACH ADDITIONAL PAGE MUST BEAR THE INITIALS OF THE PERSON MAKING THE STATEMENT, AND PAGE NUMBER MUST BE BE INDICATED.

USE THIS PAGE IF NEEDED. IF THIS PAGE IS NOT NEEDED, PLEASE PROCEED TO FINAL PAGE OF THIS FORM.

STATEMENT OF SGT (b)(3)(b)(6) TAKEN AT FOB Q-West DATED 20070509

9. STATEMENT (Continued) (b)(3)(b)(6)

Question #4: Describe in detail EOF Procedures leading up to the vehicle approaching?
Answer: Flashed a spotlight at the vehicle several times, shined laser into cab of vehicle at 100meters fired M-16 warning shots to the left of vehicle, and about 80meters while the vehicle was still approaching at a high rate of speed fired 50cal to eliminate threat. (b)(3)(b)(6) - End of statement.

(b)(3)(b)(6)

INITIALS OF PERSON MAKING STATEM (b)(3)(b)(6)

PAGE 2 OF 3 PAGES

PAGE 2, DA FORM 2823, DEC 1998

USAPA V1.00

008609

STATEMENT OF SGT (b)(3)(b)(6) TAKEN AT FOB Qwest DATED 20070509

STATEMENT (Continued)

Question 10 (b)(3)(b)(6) Do you have anything further to add to your statement at this time.

Answer: My Crew and myself fell (b)(3)(b)(6) threatened by the speed of the vehicle approaching from the rear. By ignoring all warnings from my gunner the vehicle made us believe there was hostile actions about to happen on us and our convoy (b)(3)(b)(6) end of statement

(b)(3)(b)(6)

(b)(3)(b)(6)

AVIT

I, (b)(3)(b)(6) HAVE READ OR HAVE HAD READ TO ME THIS STATEMENT WHICH BEGINS ON PAGE 1, AND ENDS ON PAGE 3. I FULLY UNDERSTAND THE CONTENTS OF THE ENTIRE STATEMENT MADE BY ME. THE STATEMENT IS TRUE. I HAVE INITIALED ALL CORRECTIONS AND HAVE INITIALED THE BOTTOM OF EACH PAGE CONTAINING THE STATEMENT. I HAVE MADE THIS STATEMENT FREELY WITHOUT HOPE OF BENEFIT OR REWARD, WITHOUT THREAT OF PUNISHMENT, AND WITHOUT COERCION, UNLAWFUL IN (b)(3)(b)(6) ENT.

(Signature of Person Making Statement)

WITNESSES:

Captain (b)(3)(b)(6)

524th CSSB Battle desk

ORGANIZATION OR ADDRESS

ORGANIZATION OR ADDRESS

Subscribed and sworn to before me, a person authorized by law to administer oaths, this _____ day of _____, _____ at (b)(3)(b)(6)

(Typed Name of Person Administering Oath)

(Authority To Administer Oaths)

INITIALS OF PERSON MAKING STATEMENT (b)(3)(b)(6)

PAGE 3 OF 3 PAGES

PAGE 3, DA FORM 2823, DEC 1998

USAPA V1.00

008610

ENCLOSURE V

SWORN STATEMENT

For use of this form, see AR 190-45; the proponent agency is ODCSOPS

PRIVACY ACT STATEMENT

AUTHORITY: Title 10 USC Section 301; Title 5 USC Section 2951; E.O. 9397 dated November 22, 1943 *(SSN)*.
PRINCIPAL PURPOSE: To provide commanders and law enforcement officials with means by which information may be accurately
ROUTINE USES: Your social security number is used as an additional/alternate means of identification to facilitate filing and retrieval.
DISCLOSURE: Disclosure of your social security number is voluntary.

1. LOCATION	2. DATE *(YYYYMMDD)*	3. TIME	4. FILE NUMBER
QWEST	20070511	1850	

5.	6. SSN	7. GRADE/STATUS
(b)(3)(b)(6)	(b)(3)(b)(6)	E4

8. ORGANIZATION OR ADDRESS
714 MC

9. (b)(3)(b)(6), WANT TO MAKE THE FOLLOWING STATEMENT UNDER OATH:

Q: TELL ME WHAT HAPPENED (b)(3)(b)(6) on the night 8 MAY 2007?

A: WE CAME TO A STOP, IT WAS OUR SECOND STOP OF THE NIGHT FOR PIED. I HAD ABOUT 300 M LINE OF SIGHT. I STOPPED ONE TRUCK SHORTLY AFTER STOPPING. A WHILE AFTER THAT A SECOND VEHICLE PASSED THE FIRST. I SHINED MY SPOTLIGHT AT HIM WITH NO RESULT. I DID THIS UNTIL ABOUT 200M MARK. I THEN USED MY LASER AND WEAPONLIGHT MOVING AROUND TO MAKE SURE HE SAW. HE DID NOT STOP. AT 100M I FIRED THREE WARNING SHOTS TO THE LEFT SIDE OF THE ROAD. HE DID NOT STOP. AT 30M MY TC, SGT (b)(3)(b)(6) ORDERED ME TO ENGAGE. I FIRED ONE BURST INTO THE GRILL AND THEN A SECOND BURST TO ELIMINATE THE THREAT. THE FLARE STEP WAS SKIPPED DUE TO THE HIGH RATE OF SPEED AT WHICH THE VEHICLE WAS TRAVELING.

Q: How long had you been on the road @ the time of the incident?
A. WE HAD BEEN ON THE ROAD ABOUT 3 HOURS.

Q: How much sleep did you have prior to the event?
A: I GOT 8 HOURS OF SLEEP PRIOR TO THE MISSION.

Q: Have you ever had a negligent discharge? If so what date
A: NO

Q: When was your last EOF Training?
A: WE DID EOF TRAINING AT THE LLP RC BEFORE THE MISSION

Q: Were you on any medications that may have impaired your judgement?
A: NO

10. EXHIBIT	11. INITIALS OF PERSON MAKING STATEMENT	PAGE 1 OF 3 PAGES
V	(b)(3)(b)(6)	

ADDITIONAL PAGES MUST CONTAIN THE HEADING "STATEMENT _____ TAKEN AT _____ DATED _____

THE BOTTOM OF EACH ADDITIONAL PAGE MUST BEAR THE INITIALS OF THE PERSON MAKING THE STATEMENT, AND PAGE NUMBER MUST BE BE INDICATED.

USE THIS PAGE IF NEEDED. IF THIS PAGE IS NOT NEEDED, PLEASE PROCEED TO FINAL PAGE OF THIS FORM.

STATEMENT O (b)(3)(b)(6) TAKEN AT QWEST DATED 11MAY07

9. STATEMENT *(Continued)*

Q: Do you have any more information that may be pertinent to this investigation?

A: NO

END OF STATEMENT

(b)(3)(b)(6)

(b)(3)(b)(6)

INITIALS OF PER (b)(3)(b)(6) STATEMENT

PAGE 2 OF 3 PAGES

STATEMENT OF (b)(3)(b)(6) TAKEN AT QWEST DATED 11MAY07

9. STATEMENT *(Continued)*

(b)(3)(b)(6)

(b)(3)(b)(6)

AFFIDAVIT

I, (b)(3)(b)(6), HAVE READ OR HAVE HAD READ TO ME THIS STATEMENT WHICH BEGINS ON PAGE 1, AND ENDS ON PAGE 3. I FULLY UNDERSTAND THE CONTENTS OF THE ENTIRE STATEMENT MADE BY ME. THE STATEMENT IS TRUE. I HAVE INITIALED ALL CORRECTIONS AND HAVE INITIALED THE BOTTOM OF EACH PAGE CONTAINING THE STATEMENT. I HAVE MADE THIS STATEMENT FREELY WITHOUT HOPE OF BENEFIT OR REWARD, WITHOUT THREAT OF PUNISHMENT, AND WITHOUT COERCION, UNLAWFUL INF

(b)(3)(b)(6)

(Signature of Person Making Statement)

WITNESSES:

(b)(3)(b)(6) SFC

FOB QWEST LTAG APO AE 09351

ORGANIZATION OR ADDRESS

ORGANIZATION OR ADDRESS

Subscribed and sworn to before me, a person authorized by law to administer oaths, this 11 day of MAY, 2007

at

(b)(3)(b)(6)

Administering Oath)

(b)(3)(b)(6) CPT, MS

(Typed Name of Person Administering Oath)

(Authority To Administer Oaths)

INITIALS OF PERSON MAKING STATEM (b)(3)(b)(6)

PAGE 3 OF 3 PAGES

SIR 271

SWORN STATEMENT

For use of this form, see AR 190-45; the proponent agency is ODCSOPS

PRIVACY ACT STATEMENT

AUTHORITY:	Title 10 USC Section 301; Title 5 USC Section 2951; E.O. 9397 dated November 22, 1943 (SSN).
PRINCIPAL PURPOSE:	To provide commanders and law enforcement officials with means by which information may be accurately identified.
ROUTINE USES:	Your social security number is used as an additional/alternate means of identification to facilitate filing and retrieval.
DISCLOSURE:	Disclosure of your social security number is voluntary.

1. LOCATION	2. DATE (YYYYMMDD)	3. TIME	4. FILE NUMBER
GWEST	20070509	0725	

5: (b)(3)(b)(6) 6: (b)(3)(b)(6) 7. GRADE/STATUS E4

8. ORGANIZATION OR ADDRESS
719 MAINT CO

9:

I, _____, WANT TO MAKE THE FOLLOWING STATEMENT UNDER OATH:

These Questions and answers are in relation to events that occurred on 08 2340D May 07 during Tornado 12 CLP HBG to QBC along MSR Tampa.

(b)(3)(b)(6)

QUESTION #1: WHEN DID YOU REALIZE THIS TCN WENT ASTRAY?
ANSWER: WE WERE NOTIFIED THAT IT WAS ONE OF OUR TCNS AFTER THE INCIDENT.

(b)(3)(b)(6)

QUESTION #2: WHAT ARE PROCEDURES FOR VEHICLE GOING ASTRAY BEFORE CKPT 5?
ANSWER: NORTH OF CKPT 5 WE PULL THEIR PLACARD AND SEND THEM BACK TO ZAHED.

(b)(3)(b)(6)

QUESTION #3: WHY DIDN'T YOU ATTEMPT TO GET VEHICLE BACK INTO CLP?
ANSWER: I WAS NOWHERE AROUND WHEN HIS PLACARD WAS PULLED.

(b)(3)(b)(6)

QUESTION #4: WHERE DO YOU NORMALLY STOP TO RECONSOLIDATE? WHAT PLACES ALONG THE HBG ROUTE?
ANSWER: CKPT 5

(b)(3)(b)(6)

QUESTION #5: HOW LONG WERE YOU IN CKPT 5 TO REFUEL BEFORE PROCEDING SOUTH?
ANSWER: MY TRUCK WAS HALTED FOR APPROXIMATELY 15-20 MINUTES.

(b)(3)(b)(6)

QUESTION #6: DID TCN VEHICLE EVER ATTEMPT TO GET BACK IN CLP PRIOR TO CKPT 5?
ANSWER: NOT THAT I AM AWARE OF.

(b)(3)(b)(6)

QUESTION #7: WHAT CHECKPOINT DID TCN'S PLACARD GET PULLED?
ANSWER: SOUTH OF CHECKPOINT 3

(b)(3)(b)(6)

QUESTION #8: HOW FAR WAS VEHICLE FROM YOUR VEHICLE WHEN YOU FIRED ROUND AT DRIVER?
ANSWER: APPROXIMATELY 60-80 METERS

10. EXHIBIT	11. INITIALS OF PERSON MAKING STATEMENT	PAGE 1 OF 3 PAGES
	(b)(3)(b)(6)	

ADDITIONAL PAGES MUST CONTAIN THE HEADING "STATEMENT _____ TAKEN AT _____ DATED _____"

THE BOTTOM OF EACH ADDITIONAL PAGE MUST BEAR THE INITIALS OF THE PERSON MAKING THE STATEMENT, AND PAGE NUMBER MUST BE BE INDICATED.

USE THIS PAGE IF NEEDED. IF THIS PAGE IS NOT NEEDED, PLEASE PROCEED TO FINAL PAGE OF THIS FORM.

TATEMENT OF (b)(3)(b)(6) TAKEN AT 0725 DATED 20070509

9. STATEMENT (Continued) (b)(3)(b)(6)

QUESTION #9: DESCRIBE IN DETAIL EOF PROCEDURES LEADING UP TO VEHICLE APPROACHING

ANSWER: (b)(2)High

NOTHING FOLLOWS

(b)(3)(b)(6)

INITIALS OF PERSON MAKING ST (b)(3)(b)(6)

STATEMENT OF (b)(3)(b)(6) TAKEN AT 0725 DATED 20070509

STATEMENT *(Continued)*

(b)(3)(b)(6)

AFFIDAVIT

(b)(3)(b)(6)

WHICH BEGINS ON PAGE 1, AND ENDS ON PAGE 3. I FULLY UNDERSTAND THE CONTENTS OF THE ENTIRE STATEMENT MADE BY ME. THE STATEMENT IS TRUE. I HAVE INITIALED ALL CORRECTIONS AND HAVE INITIALED THE BOTTOM OF EACH PAGE CONTAINING THE STATEMENT. I HAVE MADE THIS STATEMENT FREELY WITHOUT HOPE OF BENEFIT OR REWARD, WITHOUT THREAT OF PUNISHMENT, AND WITHOUT COERCION, UNLAWFUL IN

(b)(3)(b)(6)

WITNESSES:

Captain (b)(3)(b)(6)
524th

ORGANIZATION OR ADDRESS

ORGANIZATION OR ADDRESS

Subscribed and sworn to before me, a person authorized by law to administer oaths, this _____ day of _____, _____ at

(b)(3)(b)(6)

(Typed Name of Person Administering Oath)

(Authority To Administer Oaths)

INITIALS OF PERSON MAKING S (b)(3)(b)(6)

PAGE 3 OF 3 PAGES

EOF S/R #27)

SWORN STATEMENT

For use of this form, see AR 190-45; the proponent agency is PMG.

PRIVACY ACT STATEMENT

AUTHORITY:	Title 10 USC Section 301; Title 5 USC Section 2951; E.O. 9397 dated November 22, 1943 (SSN).
PRINCIPAL PURPOSE:	To provide commanders and law enforcement officials with means by which information may be accurately identified.
ROUTINE USES:	Your social security number is used as an additional/alternate means of identification to facilitate filing and retrieval.
DISCLOSURE:	Disclosure of your social security number is voluntary.

1. LOCATION	2. DATE (YYYYMMDD)	3. TIME	4. FILE NUMBER
Q-WEST	20060509	0612	

5. (b)(3)(b)(6) 6. SSN (b)(3)(b)(6) 7. GRADE/STATUS E4

8. 718 MAINT CO

9. I (b)(3)(b)(6), WANT TO MAKE THE FOLLOWING STATEMENT UNDER OATH:

What was the incident? (IED, PIED, SAF,.....) _____ Was your vehicle involved? (YES) NO

If the incident was an IED, approximately how far was the IED from the vehicle involved? _____

If the incident was an IED, where was the IED located? (Right, Left,.....) _____

If the incident was an IED, if seen, what type of IED was it? (155mm, 122mm,.....) _____

If the incident was an IED, where was the blast focused? (Outward, Upward,....) _____

What vehicle were you in the CLP, to include GTs? (1,2,3,.....) 89

Approximately what speed was the CLP traveling at the time of the incident? HALTED

What position in the vehicle were you in? (Driver, TC, Gunner): GUNNER

What was the bumper number (TC 101, GT-04,...) and type (M1114, M1088, 5 Ton,...) T110

Where did the incident happen? (Grid, NB/SB, ASR/MSR, landmarks,.....) (b)(2)High

Were there any injuries? 1 KIA

What are the damages to equipment, vehicle and/or cargo? _____

Who was contacted? 524 CSSB When? SOON AFTER

Describe in your own words what happened before and after the incident. AT APPROXIMATELY 2300 THE CONVOY HALTED FOR A PIED. I AM THE GUNNER IN RED 10 THE CONVOY'S REAR SECURITY ELEMENT. SHORTLY AFTER STOPPING I FLASHED MY SPOTLIGHT AT A VEHICLE ABOUT 300 METERS AWAY. IT STOPPED, TURNED OFF ITS HEADLIGHTS AND TURNED ITS FOUR WAYS ON. THEN ANOTHER VEHICLE PASSED THE FIRST ONE AND DID NOT STOP WHEN I FLASHED MY SPOTLIGHT AT IT. I FLASHED MY SPOTLIGHT FIVE MORE TIMES, IN RAPID SUCCESSION. THE TRUCK DID NOT

10. EXHIBIT	11. INITIALS OF PERSON MAKING STATEMENT	PAGE 1 OF 3 PAGES
	(b)(3)(b)(6)	

ADDITIONAL PAGES MUST CONTAIN THE HEADING "STATEMENT _____ TAKEN AT _____ DATED _____

THE BOTTOM OF EACH ADDITIONAL PAGE MUST BEAR THE INITIALS OF THE PERSON MAKING THE STATEMENT, AND PAGE NUMBER MUST BE BE INDICATED.

USE THIS PAGE IF NEEDED. IF THIS PAGE IS NOT NEEDED, PLEASE PROCEED TO FINAL PAGE OF THIS FORM.

'ATEMENT OF (b)(3)(b)(6) EN AT 0612 DATED 20070509

9. STATEMENT *(Continued)*

STOP. I PICKED UP MY RIFLE AND SHINED MY LASER AT GROUND IN FRONT OF THE VEHICLE AND REPEATEDLY FLASHED MY SPOTLIGHT. THE TRUCK STILL DID NOT RESPOND. I INFORMED MY TRUCK COMMANDER, SGT (b)(3)(b)(6) OF THE DEVELOPING SITUATION. THE TRUCK WAS MOVING AT A HIGH RATE OF SPEED AND WHEN IT GOT ABOUT 100 METERS AWAY I FIRED THREE WARNINGS SHOTS, ALL TRACERS, TO THE LEFT SIDE OF THE ROAD. I SKIPPED THE FLARE STEP IN THE ESCALATION OF FORCE DUE TO THE SPEED AT WHICH THE TRUCK WAS TRAVELING. AT APPROXIMATELY 80 METERS, MY TRUCK COMMANDER ORDERED ME TO ELIMINATE THE THREAT. I FIRED A BURST INTO THE GRILL TO DISABLE AND THEN INTO WINDSHIELD WITH THE SECOND BURST. ABOUT 10-20 ROUNDS WERE FIRED OF .50 CAL. THE TRUCK VEERED OFF INTO THE DITCH. WHEN THE TRUCK CAME TO A STOP, THE DRIVER WAS HANGING OUT OF WINDOW AND THERE WAS A FIRE IN THE CAB. THE SHOTS WERE FIRED AT APPROXIMATELY 2310. SHORTLY AFTER THE INCIDENT RED 7 AND RED 6 SHOWED UP AND THE MEDIC, CPL GARCIA, PRONOUNCED THE TCN DEAD. RECOVERY PICKED UP THE TRUCK AND THE BODY.

NOTHING FOLLOWS

(b)(3)(b)(6)

INITIALS OF PERSON MAKING STATEMENT (b)(3)(b)(6)

STATEMENT OF SPC (b)(3)(b)(6) TAKEN AT 0612 DATED 20070509

STATEMENT *(Continued)*

(b)(3)(b)(6)

(b)(3)(b)(6)

AFFIDAVIT

WHIC ____. I FULLY UNDERSTAND THE CONTENTS OF THE ENTIRE STATEMENT MADE BY ME. THE STATEMENT IS TRUE. I HAVE INITIALED ALL CORRECTIONS AND HAVE INITIALED THE BOTTOM OF EACH PAGE CONTAINING THE STATEMENT. I HAVE MADE THIS STATEMENT ____. HAVE READ OR HAVE HAD READ TO ME THIS STATEMENT THREAT OF PUNISHMENT, AND WITHOUT COERCION, UNLAWFU

(b)(3)(b)(6)

WITNESSES:

(b)(3)(b)(6)

(b)(3)(b)(6)

ORGANIZATION OR ADDRESS

Subscribed and sworn to before me, a person authorized by law to administer oaths, this _____ day of _____, _____ at _____

(Signature of Person Administering Oath)

(Typed Name of Person Administering Oath)

(Authority To Administer Oaths)

INITIALS OF PERSON MAKING STATEMENT (b)(3)(b)(6)

PAGE 3 OF 3 PAGES

PAGE 3, DA FORM 2823, DEC 1998

USAPA V1.01

RIGHTS WARNING PROCEDURE/WAIVER CERTIFICATE

For use of this form, see AR 190-30; the proponent agency is ODCSOPS

DATA REQUIRED BY THE PRIVACY ACT

AUTHORITY: Title 10, United States Code, Section 3012(g)
PRINCIPAL PURPOSE: To provide commanders and law enforcement officials with means by which information may be accurately identified.
ROUTINE USES: Your Social Security Number is used as an additional/alternate means of identification to facilitate filing and retrieval.
DISCLOSURE: Disclosure of your Social Security Number is voluntary.

1. LOCATION	2. DATE	3. TIME	4. FILE NO.
Q WEST	11MAY07	1825	

5. (b)(3)(b)(6)

6. SSN (b)(3)(b)(6)

7. GRADE/STATUS E4

8. ORGANIZATION OR ADDRESS
714th MC
FOB Q-West Iraq
APO AE 09351

PART I - RIGHTS WAIVER/NON-WAIVER CERTIFICATE

Section A. Rights

(b)(3)(b)(6) e name appears below told me that he/she is with the United States Army 45th Sustainment BDE and wanted to question me about the following offense(s) of which I am EOF EVENTS of 9 MAY 2007

Before he/she asked me any questions about the offense(s), however, he/she made it clear to me that I have the following rights:

1. I do not have to answer any question or say anything.
2. Anything I say or do can be used as evidence against me in a criminal trial.
3. *(For personnel subject to the UCMJ)* I have the right to talk privately to a lawyer before, during, and after questioning and to have a lawyer present with me during questioning. This lawyer can be a civilian lawyer I arrange for at no expense to the Government or a military lawyer detailed for me at no expense to me, or both.

   - or -

   (For civilians not subject to the UCMJ) I have the right to talk privately to a lawyer before, during, and after questioning and to have a lawyer present with me during questioning. I understand that this lawyer can be one that I arrange for at my own expense, or if I cannot afford a lawyer and want one, a lawyer will be appointed for me before any questioning begins.
4. If I am now willing to discuss the offense(s) under investigation, with or without a lawyer present, I have a right to stop answering questions at any time, or speak privately with a lawyer before answering further, even if I sign the waiver below.

5. COMMENTS *(Continue on reverse side)*

Section B. Waiver

I understand my rights as stated above. I am now willing to discuss the offense(s) under investigation and make a statement without talking to a lawyer first and without having a lawyer present with me.

(b)(3)(b)(6)

714MC
FOB Q-WEST Iraq

2a. NAME *(Type or Print)*

b. ORGANIZATION OR ADDRESS AND PHONE

(b)(3)(b)(6)

(b)(3)(b)(6)

T, MS

c. ORGANIZATION OF INVESTIGATOR
45th SUSTAINMENT BRIGADE

Section C. Non-waiver

1. I do not want to give up my rights
   ☐ I want a lawyer ☐ I do not want to be questioned or say anything

2. SIGNATURE OF INTERVIEWEE

ATTACH THIS WAIVER CERTIFICATE TO ANY SWORN STATEMENT *(DA FORM 2823)* SUBSEQUENTLY EXECUTED BY THE SUSPECT/ACCUSED

PART II - RIGHTS WARNING PROCEDURE

THE WARNING

1. WARNING - Inform the suspect/accused of:
   a. Your official position.
   b. Nature of offense(s).
   c. The fact that he/she is a suspect/accused.
2. RIGHTS - Advise the suspect/accused of his/her rights as follows:
   "Before I ask you any questions, you must understand your rights."
   a. "You do not have to answer my questions or say anything."
   b. "Anything you say or do can be used as evidence against you in a criminal trial."
   c. (For personnel subject to the UCMJ) "You have the right to talk privately to a lawyer before, during, and after questioning and to have a lawyer present with you during questioning. This lawyer can be a civilian you arrange for at no expense to the Government or a military lawyer detailed for you at no expense to you, or both."

   - or -

   (For civilians not subject to the UCMJ) You have the right to talk privately to a lawyer before, during, and after questioning and to have a lawyer present with you during questioning. This lawyer can be one you arrange for at your own expense, or if you cannot afford a lawyer and want one, a lawyer will be appointed for you before any questioning begins."
   d. "If you are now willing to discuss the offense(s) under investigation, with or without a lawyer present, you have a right to stop answering questions at any time, or speak privately with a lawyer before answering further, even if you sign a waiver certificate."

Make certain the suspect/accused fully understands his/her rights.

THE WAIVER

"Do you understand your rights?"
(If the suspect/accused says "no," determine what is not understood, and if necessary repeat the appropriate rights advisement. If the suspect/accused says "yes," ask the following question.)

"Have you ever requested a lawyer after being read your rights?"
(If the suspect/accused says "yes," find out when and where. If the request was recent *(i.e., fewer than 30 days ago)*, obtain legal advice whether to continue the interrogation. If the suspect/accused says "no," or if the prior request was not recent, ask him/her the following question.)

"Do you want a lawyer at this time?"
(If the suspect/accused says "yes," stop the questioning until he/she has a lawyer. If the suspect/accused says "no," ask him/her the following question.)

"At this time, are you willing to discuss the offense(s) under investigation and make a statement without talking to a lawyer and without having a lawyer present with you?" *(If the suspect/accused says "no," stop the interview and have him/her read and sign the non-waiver section of the waiver certificate on the other side of this form. If the suspect/accused says "yes," have him/her read and sign the waiver section of the waiver certificate on the other side of this form.)*

SPECIAL INSTRUCTIONS

WHEN SUSPECT/ACCUSED REFUSES TO SIGN WAIVER CERTIFICATE: If the suspect/accused orally waives his/her rights but refuses to sign the waiver certificate, you may proceed with the questioning. Make notations on the waiver certificate to the effect that he/she has stated that he/she understands his/her rights, does not want a lawyer, wants to discuss the offense(s) under investigation, and refuses to sign the waiver certificate.

IF WAIVER CERTIFICATE CANNOT BE COMPLETED IMMEDIATELY: In all cases the waiver certificate must be completed as soon as possible. Every effort should be made to complete the waiver certificate before any questioning begins. If the waiver certificate cannot be completed at once, as in the case of street interrogation, completion may be temporarily postponed. Notes should be kept on the circumstances.

PRIOR INCRIMINATING STATEMENTS:

1. If the supsect/accused has made spontaneous incriminating statements before being properly advised of his/her rights he/she should be told that such statements do not obligate him/her to answer further questions.
2. If the suspect/accused was questioned as such either without being advised of his/her rights or some question exists as to the propriety of the first statement, the accused must be so advised. The office of the serving Staff Judge Advocate should be contacted for assistance in drafting the proper rights advisal.

NOTE: If 1 or 2 applies, the fact that the suspect/accused was advised accordingly should be noted in the comment section on the waiver certificate and initialed by the suspect/accused.

WHEN SUSPECT/ACCUSED DISPLAYS INDECISION ON EXERCISING HIS OR HER RIGHTS DURING THE INTERROGATION PROCESS: If during the interrogation, the suspect displays indecision about requesting counsel (for example, "Maybe I should get a lawyer."), further questioning must cease immediately. At that point, you may question the suspect/accused only concerning whether he or she desires to waive counsel. The questioning may not be utilized to discourage a suspect/accused from exercising his/her rights. (For example, do not make such comments as "If you didn't do anything wrong, you shouldn't need an attorney.")

COMMENTS *(Continued)*

ENCLOSURE VI

SECRET//REL MCFI

ALL ITEMS IN BLUE MUST BE FILLED IN IOT SUBMIT A COMPLETE INITIAL SIR

ENCLOSURE VI

45TH SB SIR 1167

524TH CSSB SIR 271

(SERIOUS INCIDENT REPORT)

13 SC(E) SIR

714 TC	524 CSSB	45 SB
INITIAL	FOLLOW-UP	FINAL
09 0039D MAY 07	DTG	DTG

1. TYPE OF INCIDENT: EOF
2. DATE TIME GROUP OF INCIDENT: 08 2340D MAY 07
3. GRID LOCATION & CP: (b)(2)High
4. UNIT TIME IN COUNTRY (SINCE TOA) 8 MONTHS
5. NUMBER OF MILITARY PERSONNEL INVOLVED IN INCIDENT: 2

(ONE PER INDIVIDUAL)

A. NAME OF MILITARY PERSONNEL: (b)(3)(b)(6)
B. RANK/GRADE: SSG/E-6
C. SOCIAL SECURITY NUMBER: (b)(3)(b)(6)
D. RACE: UNK
E. SEX:
F. AGE: UNK
G. INJURIES: NA
H. TAKEN TO WHAT MEDICAL FACILITY: NA
I. DUTY POSITION: CONVOY COMMANDER
J. DUTY STATUS USAR

K. NAME OF MILITARY PERSONNEL: (b)(3)(b)(6)
L. RANK/GRADE: SPC/E-4
M. SOCIAL SECURITY NUMBER: (b)(3)(b)(6)
N. RACE: UNK
O. SEX: (b)(3)(b)(6)
P. AGE: UNK
Q. INJURIES: N/A
R. TAKEN TO WHAT MEDICAL FACILITY: N/A
S. DUTY POSITION: GUNNER
T. DUTY STATUS USAR
U. COMMODITY INVOLVED (CLASS OF SUPPLY BEING HAULED): N/A

Contact - XO 1st 714 Co CMD

Ask BN for / Co → EOF Policies

- who was in the vehicle
Driver

- Diagram's if possible
Finding / Facts
↳ Recommendation based on Finding based on Evidence

Describe the 5 W's

- Ask other gun trucks

6. **SUMMARY OF INCIDENT:**

While at a halt for a PIED, Tornado 12 had an escalation of force. The threat was described as a TCN vic, fast approaching the rear of the CLP. The gunner (b)(3)(b)(6) stated that he employed the shine and show measures, then fired rounds approximately 7-10 rounds of .50 Cal to the right side of the vic. When the vic refused to slow down, veer off or come to a halt, the gunner was forced to employ lethal force, firing approximately 3 .50 Cal rounds into the driver. Once the TCN vic came to a halt, the medic (b)(3)(b)(6) assessed the TCN driver for injuries, and pronounced the driver dead as of 08 2351D MAY 07. The TCN vic was approximately 80 meters when lethal force was utilized.

FOLLOW UP INFORMATION:

The body of the deceased TCN was taken by the Scorpion X-ray Recovery Team to the 111th Marez Mortuary Affairs. An investigation will be initiated. Sworn statements were gathered and are currently being reviewed.

WHAT WERE THE UNIT TTPS FOR THIS INCIDENT (IF APPLICABLE)?

WERE THE UNIT TTPS FOLLOWED? (IF NO, PROVIDE AS MUCH DETAIL AS POSSIBLE)

FINAL INFORMATION:

7. SAF/IED INFORMATION

A. WAS IT A SAF OR IED DET?
B. WHAT VEHICLE IN THE ORDER OF MARCH WAS HIT?
C. AZIMUTH LOCATION OF SAF OR IED DET(EAST, WEST OF ROAD):
D. IED LOCATION ATTRIBUTES (SURFACE LAID, HANGING):
E. WAS EOD CONTACTED? TIME?

VEHICLE/EQUIPMENT DAMAGE (USE THIS SECTION FOR ANY BDA):

F. MODEL:
G. TYPE: (GT, KBR FLATBED, ETC)
H. ARMOR:
I. DAMAGES:
J. DISABLED OR OPERATIONAL:
K. HOW WAS VEHICLE RECOVERED
L. CLASS OF SUPPLY CARRIED:
M. GFE (WAS VEHICLE GOVERNMENT FURNISHED EQUIPMENT?)
N. WHICH VEHICLE IN THE ORDER OF MARCH:

8. EOF INFORMATION

A. WAS SPOT LIGHT USED?	YES
B. WAS PEN FLARE USED?	NO

C. OTHER MEANS OF WARNINGS:	YES (Show of force with weapon)
D. HOW WERE WARNING SHOTS EMPLOYED? (RIGHT SIDE, HOOD, ETC)	Right side, hood and into engine block
E. WAS POSITIVE IDENTIFICATION MADE?	Yes
F. TYPE OF WEAPON? # OF SHOTS FIRED?	M2 .50 Cal 10-12 Rounds
G. DID CLP STOP TO ASSESS CASUALTIES/DAMAGES?	Yes
H. REASON CLP DID NOT STOP TO ASSESS CASUALTIES/DAMAGES?	
I. CLAIMS CARD ISSUED?	No
J. REASON CLP DID NOT STOP TO ISSUE CLAIMS CARD?	TCN is deceased
K. COMMANDER'S INQUIRY OR 15-6 REQUIRED?	Yes

9. CLP INFORMATION

A. RANK/NAME OF CLP COMMANDER:	(b)(3)(b)(6)
B. CLP CALL SIGN:	TORNADO 12
C. CLP MTS/BFT NUMBER:	CPP19-352CSSB-45SB-13ESC
D. GROUP 142 / 167 MTS FROM CLP (YES OR NO) AND DTG:	
E. IF NO MTS WAS SENT, WHY	
F. SHERIFF NET CONTACTED (POSITIVE COMM) DTG:	
G. SHERIFF NET ATTEMPTED (NEGATIVE COMM) DTG:	
H. WAS MEDEVAC REQUESTED? TIME REQUESTED? TIME OF ARRIVAL?	NO
I. QRF REQUESTED (YES OR NO) AND DTG:	NO
J. RECOVERY REQUESTED (YES OR NO) AND DTG:	YES 09 0011D MAY 07
K. CONVOY SPEED:	HALTED
L. CONVOY INTERVAL:	50 M
M. CONVOY DIRECTION/ROUTE/START POINT/RELEASE POINT/LEG:	(b)(2)High 2
N. BATTLESPACE OWNER CONTACTED (POSITIVE COMM) WHEN ENTERING THEIR BATTLESPACE DTG?	YES 08 2312D MAY 07
O. BATTLESPACE OWNER CONTACTED (NEGATIVE COMM) WHEN ENTERING THEIR BATTLESPACE DTG?	

P. CONVOY COMPOSITION	(b)(2)High

14						
15						
16						
17						
18						
19						
20						
21						
22						
23						
24						
25						
26						
27						

10. SAFETY INFORMATION

A. SEATBELTS WORN:	YES
B. ALL IBA WORN:	YES
C. COMBAT LOCKS ENGAGED:	YES
D. ROLLOVER PROCEDURES USED:	N/A
11. PUBLICITY:	NONE
12. COMMANDER REPORTING:	SSG (b)(3)(b)(6)
13. POINT OF CONTACT:	45SB
A. NAME:	(b)(3)(b)(6)
B. RANK:	SFC/SFC/SSG/CPT
C. TELEPHONE DNVT/DSN/VOIP #:	VOIP: 243-5111; 243-5105
D. EMAIL:	(b)(3)(b)(6) @IRAQ.CENTCOM.SMIL.MIL
14. POINT OF CONTACT:	524CSSB
A. NAME:	(b)(3)(b)(6)
B. RANK:	SFC
C. TELEPHONE DNVT/DSN/VOIP #:	VOIP 243-5417/ DSN 243-5417
D. EMAIL:	(b)(3)(b)(6) @S-IRAQ.CENTCOM.SMIL.MIL OR (b)(3)(b)(6) @S-IRAQ.CENTCOM.SMIL.MIL

15. DOWNGRADING INSTRUCTIONS: (PROVIDE DOWNGRADING INSTRUCTIONS FOR CLASSIFIED REPORT OR REMOVAL DATE FOUO MARKINGS AS APPROPRIATE.) THIS REPORT IS IN ACCORDANCE WITH ARCENT/DJFLCC REQUIREMENTS AND AR 190-40.

PAGE 1: ITEM 5 CONTINUED

Pages 87 through 96 redacted for the following reasons:
- -
(b)(2)High, Non Responsive

ENCLOSURE IX

Enclosure XI

(b)(2)High

ENCLOSURE X

EOF Diagram

Enclosure X

(b)(2)High

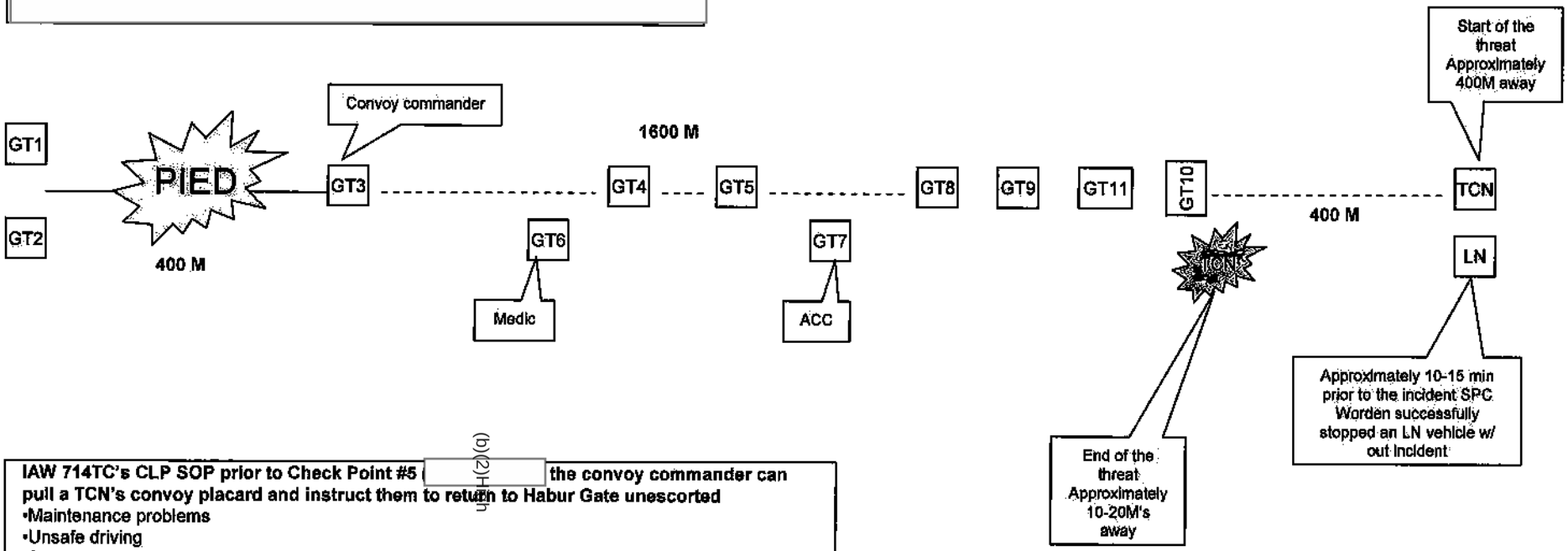

IAW 714TC's CLP SOP prior to Check Point #5 (b)(2)High the convoy commander can pull a TCN's convoy placard and instruct them to return to Habur Gate unescorted

- Maintenance problems
- Unsafe driving
- Suspected intoxication
- Once this placard has been pulled the TCN vehicle is no longer a part of the convoy
- The Convoy Commander notifies the MCT, 714th TC Battle Desk, and convoy of vehicles removal

008642

ENCLOSURE XI

Page 102 redacted for the following reason:
- - - - - - - - - - - - - - - - - - - -
(b)(2)High